montgomery®

moves people

ELEVATORS ESCALATORS
POWER WALKS AND RAMPS

PLANNING GUIDE

montgomery®

FOREWORD 2

CONTROL SYSTEMS 4
SSC-6010 4
Spectron 4
Miprom 4
Miprom TMS 4

PASSENGER ELEVATORS
High, Medium and Low Speed Traction 5
Megatech 6
SPM standard pre-manufactured traction 7
Basement Traction 8
Hospital Traction 9
Oil Hydraulic 10
SPM (Inground) Oil Hydraulic 11
SPM Holeless Oil Hydraulic 12
HH-II Holeless Oil Hydraulic 13
Cars and Fixtures 14
Triad Car 14
Vector Fixtures 14

ENTRANCES
Single Speed Slide 15
Two Speed Slide 15
Center Opening Slide 15
Freight Elevators Doors 15
Dumbwaiter Doors 18

FREIGHT ELEVATORS
Traction 16
Oil Hydraulic 17

DUMBWAITERS 18
Electric Traction and Drum Drive

ESCALATORS 19
Crystal Balustrade 20
Solid Balustrade 21
Standard Equipment 22

POWER WALKS AND POWER RAMPS 23

SALES/SERVICE OFFICES 24

FOR NEARLY 100 YEARS The Montgomery Elevator Company has maintained the highest standard of quality in design and manufacture of vertical transportation equipment. During these years, Montgomery Elevator Company has provided equipment for a wide variety of vertical transportation requirements.

PRODUCTS Montgomery's full product line includes: Electric Elevators - Geared, Gearless and Oil Hydraulic, Passenger and freight; Standard Pre-Manufactured Passenger Elevators - Geared or Oil Hydraulic; Escalators; Power Walks and Power Ramps; Electric Dumbwaiters; Stage Lifts and other special lift applications. All with programmable solid state and energy efficient controls.

RESEARCH & DEVELOPMENT A continuing program of research and development is a major Montgomery effort. Specialized equipment in Montgomery's tower laboratory provides facilities for engineered-testing of existing and proposed elevator equipment. Montgomery's search for improved design, greater safety and more economical operation is unending.

SALES & SERVICE The Montgomery Sales and Service organization, second largest in the industry, has more than 200 offices throughout North America (U.S., Canada, Mexico, Caribbean) and overseas. Montgomery is the largest independent exclusive elevator and escalator manufacturer in the Western Hemisphere.

Montgomery's eight manufacturing facilities, each fully staffed for the manufacture and assembly of elevator and escalator equipment are' Moline, Illinois (4); McKinney, Texas; Philadelphia, Pennsylvania; Arkansas City, Kansas; and Toronto, Canada.

The Western Manufacturing Division has facilities in Arkansas City, Kansas, for the manufacture of elevator cars and entrances. Guilbert, Inc., Philadelphia, Pennsylvannia, manufactures manual and power operated doors for freight elevators, and also manufactures dumbwaiters and residential elevators.

Montgomery's Canadian corporation headquarters in Toronto covers both the Eastern and Western Divisions.

The Eastern Canada division of Montgomery has served Eastern Canada for over 50 years. The Eastern Canada division has greatly expanded manufacturing capabilities to produce the full Montgomery line, including escalators and Miprom Group Supervisory Control elevator systems.

The Western Canada division, established in 1919 in Vancouver, has always enjoyed a leading position in the elevator/escalator industry in Western Canada.

Front Cover: Leadership Square - Oklahoma City, Oklahoma

Opposite Page: Upper right - Plaza Center - Bellevue, Washington
Upper left - Vista Hotel, Kansas City, Missouri
Center - Vista Hotel, Kansas City, Missouri
Lower - One Bellevue Center, Bellevue, Washington

All specifications, dimensions and illustrations comply with product design and materials used as of date of publication. The right to make changes to product design and material used, without notice, is reserved. All hardware and software referenced in this publication and/or used in conjunction with equipment described herein is the exclusive property of Montgomery Elevator Company whether or not protected by U.S. and/or International Trademark, copyright and/or patent laws.

VISTA

11-22
1-11

montgomery®

CONTROL SYSTEMS

SSC-6610® solid state elevator power control

Montgomery SSC-6010 is a variable voltage elevator power control system that incorporates completely static control for adjustable speed, acceleration and deceleration, precise leveling accuracy and exceptionally smooth stops. Montgomery's SSC-6010 is designed for all traction elevators, geared and gearless, operating between speeds of 100-1200 fpm.

By eliminating the motor-generator set with its greater power consuming characteristics, the new Montgomery SSC-6010 solid state elevator power control system will reduce elevator power bills up to 30% per elevator. The secret is a transistor-like device called a thyristor which enables the Montgomery SSC-6010 to convert A.C. line power directly to controlled D.C. power.

The SSC-6010 offers many more benefits. By eliminating the motor-generator set, less machine room space is required and machine room loads are reduced. The entire system produces less heat which means longer equipment life and lower machine room ventilating and air conditioning requirements.

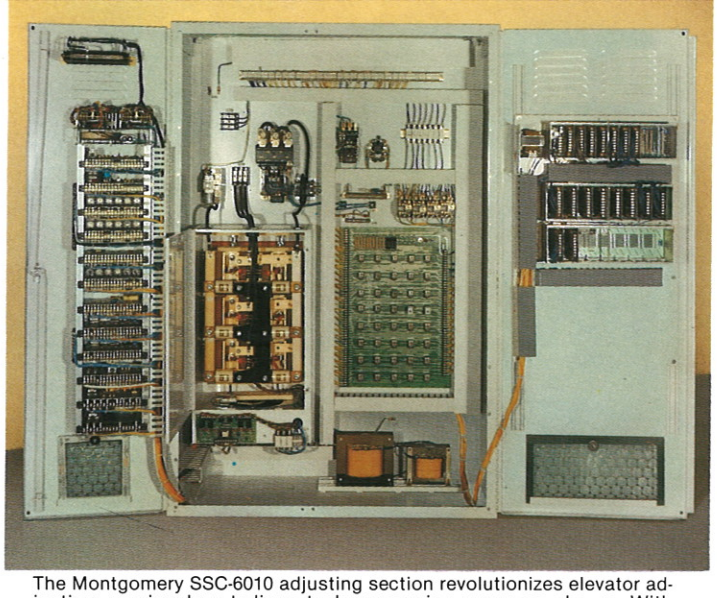

The Montgomery SSC-6010 adjusting section revolutionizes elevator adjusting, previously a tedious task consuming many man-hours. With SSC-6010, trained Montgomery technicians can quickly tune the system for most desirable performance by simply making potentiometer adjustments such as high speed, first slow down, leveling, field gain, acceleration slope, stability, response, speed gain, maximum current, etc. which achieve excellent long-term stability.

SPECTRON™ power control

Montgomery SPECTRON POWER CONTROL is the advanced alternating current power control. Economic benefits of SPECTRON include lower equipment investment (resulting from A.C. control technology gains) and reduced operating costs. SPECTRON combines high capacity integrated circuit/microprocessor technology with conventional A.C. power to produce a pulse width modulated A.C. wave form. This smooth, perfectly controlled power curve assures rapid, comfortable acceleration, ride and leveling characteristics.

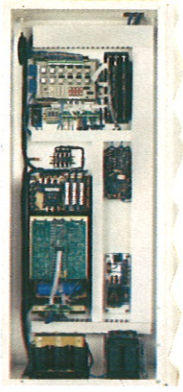

miprom® microprocessor elevator logic control

Montgomery MIPROM® is a microprocessor elevator logic control for the mass elevator market. With modular design for the most basic two landing oil hydraulic elevator, to low and medium rise buildings using geared traction elevators, and high rise buildings having high speed gearless traction elevators,"State of the art" MIPROM® is a standard.

Montgomery pioneered and developed MIPROM® to offer a compact programmable electronic elevator logic control having superior reliability, reprogrammable flexibility and ease of maintenance. All MIPROM® logic controls are strategically programmed for each individual application providing optimum service and efficiency. This allows MIPROM® to constantly monitor building traffic requirements so that it can modify its normal operation to respond to all traffic conditions experienced throughout the day.

Montgomery MIPROM® consists of a standardized solid-state modular hardware package utilizing microprocessors to create an electronic brain which performs computer functions. The microprocessor correlates signals from the elevator and multiple programmable memories, then transmits logic instructions to the elevator. All decisions are made in a matter of milliseconds.

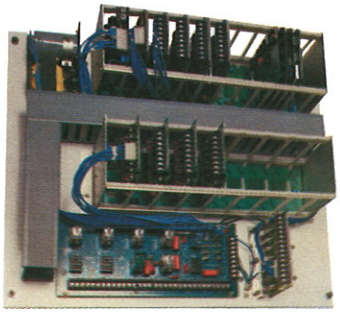

SOUND INVESTMENT FOR BUILDING OWNERS

Here are important reasons why Montgomery MIPROM® is a sound investment for building owners:

1. High Reliability - Electronic solid-state components, tested by being subjected to environmental extremes, provide the highest possible reliability.

2. Programmable Flexibility - Montgomery MIPROM® reprograms for changed building traffic patterns or other building elevator needs by exchanging the plug-in memory microprocessors — EPROM (Erasable Programmable Read Only Memory).

3. Economical - Montgomery MIPROM® costs less to maintain because of design, production standardization, miniaturization (the system requires up to 80% less space than most other elevator logic controls) and high reliability.

MIPROM TMS® Traffic Management Systems

This is the first logical step to the modernization of existing elevator installations. MIPROM TMS is a new concept in the application of our proven MIPROM® for control information that replaces existing relay logic systems. TMS provides a Microprocessor for each elevator in the group and a common or master processor to evaluate information and direct system operation to give the best service possible for each call or traffic demand. The flexibility and versatility of utilizing TMS permits additional operation modes to be added, or changed, to meet specific building needs.

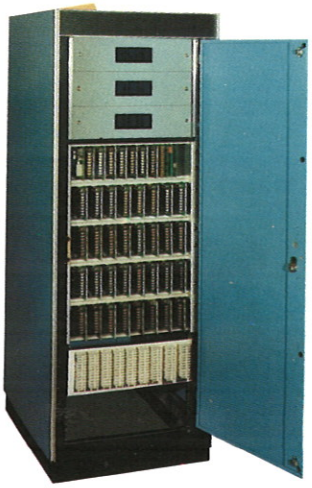

high speed traction

High-Speed Traction Elevators meet the need for high quality performance, with speeds to 1200 fpm. Heavy traffic demands are served by Group Supervisory Control Systems.

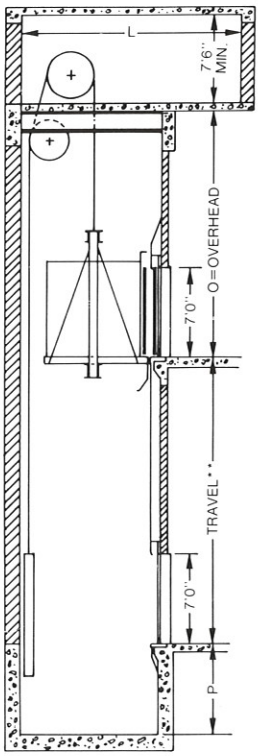

medium and low speed traction

Medium and Low Speed Traction Elevators perform efficiently and economically when serving traffic demands in medium and low rise buildings.

HANDICAPPED REQUIREMENTS AVAILABLE TO MEET NEII STANDARDS, LOCAL CODES OR LAWS.
National Elevator Industry, Inc. (NEII) Handicapped Standards are:
Placement of car controls, hall buttons and phone (or intercommunication equipment) for easy access.
Tactile markings for operating switches, buttons and hoistway door jambs.
Handrails in car — dual ray door protection — audible signals in car position indicator and lanterns.

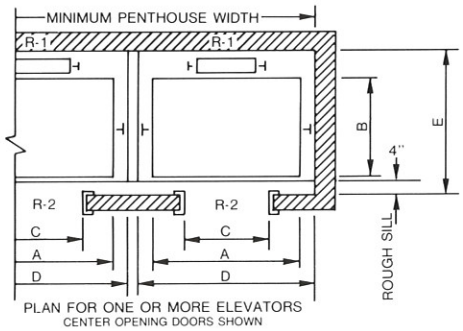

PLAN FOR ONE OR MORE ELEVATORS
CENTER OPENING DOORS SHOWN

RECOMMENDED SIZES AND CAPACITIES				
TYPE BUILDING	SMALL OFFICE	AVERAGE OFFICE HOTEL		LARGE OFFICE OR STORE
CAPACITY	2000#	2500#	3000#	3500#
A	6'- 0"	7'- 0"	7'-0"	7'-0"
B	5'- 0"	5'- 0"	5'-6"	6'-2"
C	3'- 0"	3'- 6"	3'-6"	3'-6"
D	7'- 4"	8'- 4"	8'-4"	8'-4"
E	6'-10"	6'-10"	7'-4"	8'-0"

CAPACITY	OVERHEAD LOADS/LBS. (APPROXIMATE) PER ELEVATOR							
	UP TO 350 FPM		400 FPM		500 FPM-TO-700 FPM		800 FPM-TO-1200 FPM	
	R-1	R-2	R-1	R-2	R-1	R-2	R-1	R-2
2000#	18500	9500	N/A	N/A	N/A	N/A	N/A	N/A
2500#	22000	11500	25000	15000	28000	18000	31000	21000
3000#	23000	11500	26000	15000	29000	18000	32000	22000
3500#	24500	13000	28000	16000	30000	19000	33000	23000

MINIMUM PIT — OVERHEAD & MACHINE ROOM DIMENSIONS										
SPEED	200	300	350	400	500	600	700	*800	*1000	*1200
L	15'-0"	15'-0"	15'-0"	15'-0"	18'-6"	18'-6"	18'-6"	18'-6"	18'-6"	18'-6"
O	15'-6"	16'-0"	16'-6"	16'-8"	17'-6"	18'-6"	19'-6"	21'-6"	21'-6"	23'-0"
P	4'-0"	4'-6"	5'-1"	5'-7"	7'-8"	8'-6"	9'-2"	12'-0"	12'-0"	12'-0"

NOTES:
1. Reactions include allowances for impact but DO NOT include weight of concrete slab.
2. Pit depths, overhead clearance and penthouse sizes are in accordance with ANSI/ASME code requirements. Local codes may vary these requirements.
3. Layouts and dimensions shown are for center opening type entrances. Other types available.
4. Consult your Montgomery Representative for specific recommendations where space is limited or other conditions necessitate further study.
5. All data is general. Consult your local Montgomery Representative for exact information for your working drawings.

* Add 2" to Dimension "D" for car speed over 700 FPM.
** When car travel is over 150 feet, add 1/4" to overall hoistway width and depth for each additional 25 feet of travel.
*** Increase pit dimension for 400 FPM to 7'-4" where COMPENSATION is required.

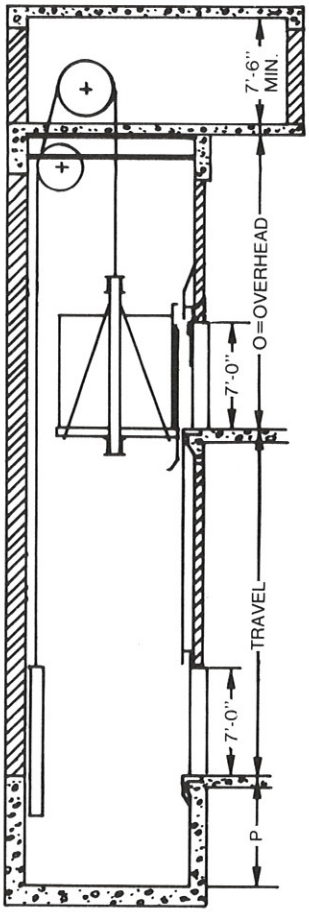

MEGATECH™

VERTICAL TRANSPORTATION SYSTEM

Developed to respond to the varying needs of today's low and mid-rise vertical transportation Customer, MEGATECH™ includes the latest in lightweight/high strength technology. Montgomery's advanced SPECTRON™ power control and miprom II™ programmable logic control are major parts of MEGATECH™. These advanced controls provide the most efficient and responsive elevator service available.

The TRIAD™ elevator car and VECTOR™ fixture system are also integral to MEGATECH™ (See page 14).

MEGATECH™ Elevators have capacities of 2000, 2500, 3000 and 3500 pounds operating at the two most commonly specified speeds (200 FPM & 350 FPM). Single and multiple car miprom II™ logic operations (up to 4 car group) are available.

HANDICAPPED REQUIREMENTS AVAILABLE TO MEET NEII STANDARDS, LOCAL CODES OR LAWS.
National Elevator Industry, Inc. (NEII) Handicapped Standards are:
Placement of car controls, hall buttons and phone (or intercommunication equipment) for easy access.
Tactile markings for operating switches, buttons and hoistway door jambs.
Handrails in car — dual ray door protection — audible signals in car position indicator and lanterns.

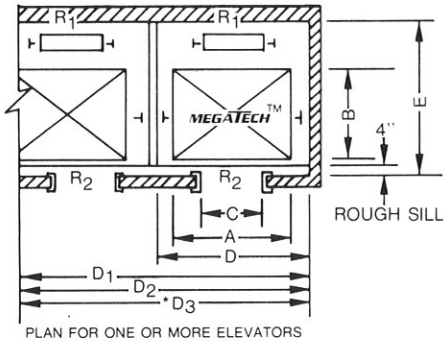

PLAN FOR ONE OR MORE ELEVATORS
CENTER OPENING DOORS SHOWN —
SINGLE SLIDE OPTIONAL
*See comment at bottom of data chart

NOTES:
1. Reactions include allowances for impact but DO NOT include weight of concrete slab.
2. Pit depths, overhead clearance and penthouse sizes are in accordance with ANSI/ASME code requirements. Local codes may vary these requirements.
3. Consult your Montgomery Representative for specific recommendations where space is limited or other conditions may necessitate further study.
4. All data is general. Consult your local Montgomery Representative for exact information for your working drawings.
5. For complete details ask for Montgomery brochure SF2452.

*When building or elevator code requires 4 car system to be placed into 2 hoistways, this dimension must be increased. Consult your local Montgomery Representative.

CAPACITIES - SPEED - GENERAL ARRANGEMENTS - SPACE REQUIREMENTS					
		MEGATECH 2000	MEGATECH 2500	MEGATECH 3000	MEGATECH 3500
CAPACITY		2000#	2500#	3000#	3500#
SPEED		200 FPM - OR - 350 FPM			
MAX. TRAVEL		200 FT.	250 FT.	200 FT. @ 200 FPM 250 FT. @ 350 FPM	200 FT. @ 200 FPM 250 FT. @ 350 FPM
MAX. LANDINGS		16 @ 200 FPM 20 @ 350 FPM	16 @ 200 FPM 25 @ 350 FPM	16 @ 200 FPM 25 @ 350 FPM	16 @ 200 FPM 25 @ 350 FPM
ALPHABETICAL DIMENSIONS	A	6'-0"	7'-0"	7'-0"	7'-0"
	B	5'-0"	5'-0"	5'-6"	6'-2"
	C	3'-0"	3'-6"	3'-6"	3'-6"
	D (1 CAR)	7'-4"	8'-4"	8'-4"	8'-4"
	D1 (2 CARS)	15'-0"	17'-0"	17'-0"	17'-0"
	D2 (3 CARS)	22'-8"	25'-8"	25'-8"	25'-8"
	D3 (4 CARS)	30'-4"*	34'-4"*	34'-4"*	34'-4"*
	E	6'-7"	6'-7"	7'-1"	7'-7"
	O (200 FPM)	15'-4"	15'-4"	15'-4"	15'-4"
	O (350 FPM)	16'-0"	16'-0"	16'-0"	16'-0"
	P (200 FPM)	4'-0"	4'-0"	4'-0"	4'-0"
	P (350 FPM)	5'-0"	5'-0"	5'-0"	5'-0"
CLEAR CAR SIZE (WIDE X DEEP)		5'-8" x 4'-3"	6'-8" x 4'-3"	6'-8" x 4'-9"	6'-8" x 5'-3"
MACHINE ROOM (WIDE X DEEP)					
	1 CAR	8'-4" x 11'-0"	8'-4" x 11'-0"	8'-4" x 11'-0"	8'-4" x 11'-0"
	2 CARS	17'-0" x 11'-0"	17'-0" x 11'-0"	17'-0" x 11'-0"	17'-0" x 11'-0"
	3 CARS	25'-8" x 11'-0"	25'-8" x 11'-0"	25'-8" x 11'-0"	25'-8" x 11'-0"
	4 CARS	34'-4" x 11'-0"	34'-4" x 11'-0"	34'-4" x 11'-0"	34'-4" x 11'-0"
OVERHEAD LOADS (APPROX. PER ELEV)					
	R-1	14,000 LBS.	14,500 LBS.	15,000 LBS.	15,500 LBS.
	R-2	8,500 LBS.	9,500 LBS.	10,500 LBS.	11,500 LBS.

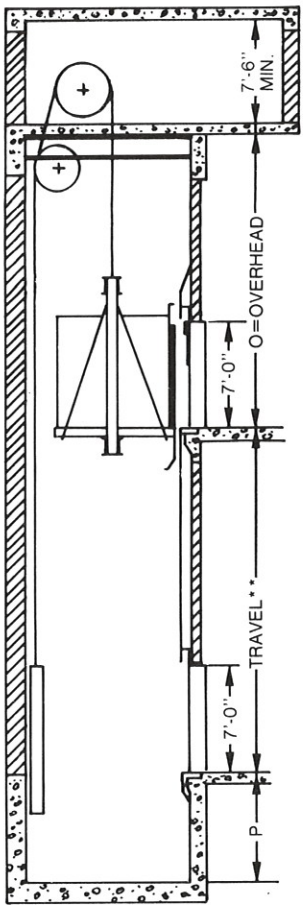

SPM® standard pre-manufactured traction elevators

SPM® elevators perform efficiently and economically when serving traffic demands in medium and low rise buildings. Standard pre-manufacturing by Montgomery means lower cost to the owner, faster delivery and installation while maintaining "custom" quality.

SPM® elevators have capacities of 2500, 3000, 3500, 4000 and 4500 pounds and offer speeds of 200 or 350 FPM. They are offered in single or multiple car operation up to a 4 car group. Flexibility is offered in entrance and fixture selection, and optional decor and finishes.

HANDICAPPED REQUIREMENTS AVAILABLE TO MEET NEII STANDARDS, LOCAL CODES OR LAWS.
National Elevator Industry, Inc. (NEII) Handicapped Standards are:
Placement of car controls, hall buttons and phone (or intercommunication equipment) for easy access.
Tactile markings for operating switches, buttons and hoistway door jambs.
Handrails in car — dual ray door protection — audible signals in car position indicator and lanterns.

SPM-G2500, SPM-G3000 & SPM-G3500

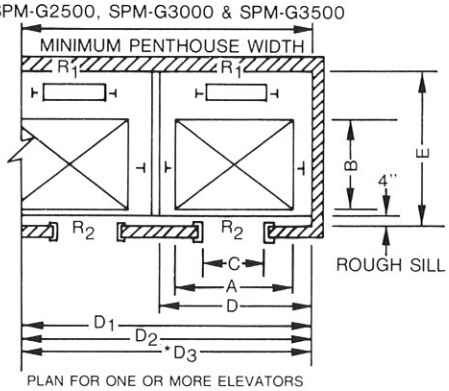

PLAN FOR ONE OR MORE ELEVATORS
CENTER OPENING DOORS SHOWN —
SINGLE SLIDE OPTIONAL
*See comment at bottom of data chart

SPM-G4000 & SPM-G4500

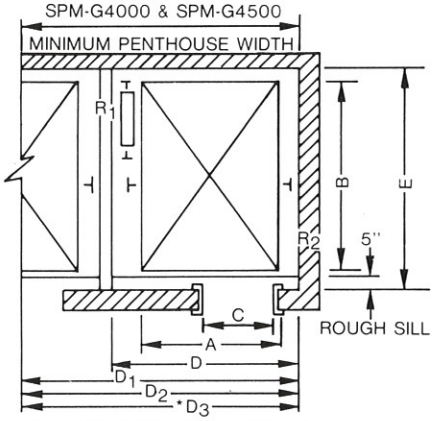

PLAN FOR ONE OR MORE ELEVATORS
TWO SPEED RIGHT HAND ENTRANCE SHOWN
(TWO SPEED LEFT HAND ALSO AVAILABLE)

NOTES:
1. Reactions include allowances for impact but DO NOT include weight of concrete slab.
2. Pit depths, overhead clearance and penthouse sizes are in accordance with ANSI/ASME code requirements. Local codes may vary these requirements.
3. Consult your Montgomery Representative for specific recommendations where space is limited or other conditions may necessitate further study.
4. All data is general. Consult your local Montgomery Representative for exact information for your working drawings.
5. For complete details ask for Montgomery brochure SF2056-R28.

*When building or elevator code requires 4 car systems to be placed into 2 hoistways, this dimension must be increased. Consult your local Montgomery Representative.
**Subject to vertical transportation study.

CAPACITIES - SPEED - GENERAL ARRANGEMENTS - SPACE REQUIREMENTS						
MODEL		SPM-G 2500	SPM-G 3000	SPM-G 3500	SPM-G 4000	SPM-G 4500
CAPACITY		2500#	3000#	3500#	4000#	4500#
SPEED		200 FPM - OR - 350 FPM				
MAX. TRAVEL **		200 FT.	200 FT. @ 200 FPM 300 FT. @ 350 FPM	200 FT. @ 200 FPM 250 FT. @ 350 FPM	200 FT.	200 FT. @ 200 FPM 300 FT. @ 350 FPM
MAX. LANDINGS		16 @ 200 FPM 20 @ 350 FPM	16 @ 200 FPM 30 @ 350 FPM	16 @ 200 FPM 25 @ 350 FPM	16 @ 200 FPM 20 @ 350 FPM	16 @ 200 FPM 25 @ 350 FPM
ALPHABETICAL DIMENSIONS	A	7'-0"	7'-0"	7'-0"	5'-8"	5'-8"
	B	5'-0"	5'-6"	6'-2"	8'-9"	9'-4"
	C	3'-6"	3'-6"	3'-6"	4'-0"	4'-0"
	D (1 CAR)	8'-4"	8'-4"	8'-4"	7'-8"	7'-8"
	D1 (2 CARS)	17'-0"	17'-0"	17'-0"	15'-8"	15'-8"
	D2 (3 CARS)	25'-8"	25'-8"	25'-8"	23'-8"	23'-8"
	D3 (4 CARS)	34'-4"*	34'-4"*	34'-4"*	31'-8"*	31'-8"*
	E	6'-7"	7'-1"	7'-7"	9'-8"	10'-3"
	O (200 FPM)	15'-4"	15'-4"	15'-4"	15'-4"	15'-4"
	O (350 FPM)	16'-0"	16'-0"	16'-0"	16'-0"	16'-0"
	P (200 FPM)	4'-0"	4'-0"	4'-0"	4'-0"	4'-0"
	P (350 FPM)	5'-0"	5'-0"	5'-0"	5'-0"	5'-0"
CLEAR CAR SIZE (WIDE X DEEP)		6'-8" x 4'-3"	6'-8" x 4'-9"	6'-8" x 5'-3"	5'-4" x 7'-11"	5'-4" x 8'-6"
MACHINE ROOM (WIDE X DEEP)						
	1 CAR	8'-4" x 13'-8"	8'-4" x 13'-8"	8'-4" x 13'-8"	7'-8" x 16'-10"	7'-8" x 17'-5"
	2 CARS	17'-0" x 13'-8"	17'-0" x 13'-8"	17'-0" x 13'-8"	15'-8" x 16'-10"	15'-8" x 17'-5"
	3 CARS	25'-8" x 13'-8"	25'-8" x 13'-8"	25'-8" x 13'-8"	23'-8" x 16'-10"	23'-8" x 17'-5"
	4 CARS	34'-4" x 13'-8"	34'-4" x 13'-8"	34'-4" x 13'-8"	31'-8" x 16'-10"	31'-8" x 17'-5"
OVERHEAD LOADS (APPROX. PER ELEV)						
	R-1	22,000 LBS.	23,000 LBS.	24,500 LBS.	29,500 LBS.	30,500 LBS.
	R-2	11,500 LBS.	11,500 LBS.	13,000 LBS.	11,000 LBS.	11,500 LBS.

basement traction — medium and low speed

Basement traction elevators are utilized for limited overhead conditions in new and existing buildings. This type of elevator facilitates future floor expansion.

HANDICAPPED REQUIREMENTS AVAILABLE TO MEET NEII STANDARDS, LOCAL CODES OR LAWS.
National Elevator Industry, Inc. (NEII) Handicapped Standards are:
Placement of car controls, hall buttons and phone (or intercommunication equipment) for easy access.
Tactile markings for operating switches, buttons and hoistway door jambs.
Handrails in car — dual ray door protection — audible signals in car position indicator and lanterns.

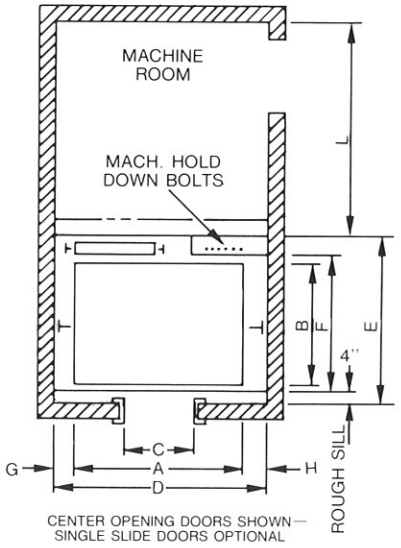

CENTER OPENING DOORS SHOWN—
SINGLE SLIDE DOORS OPTIONAL

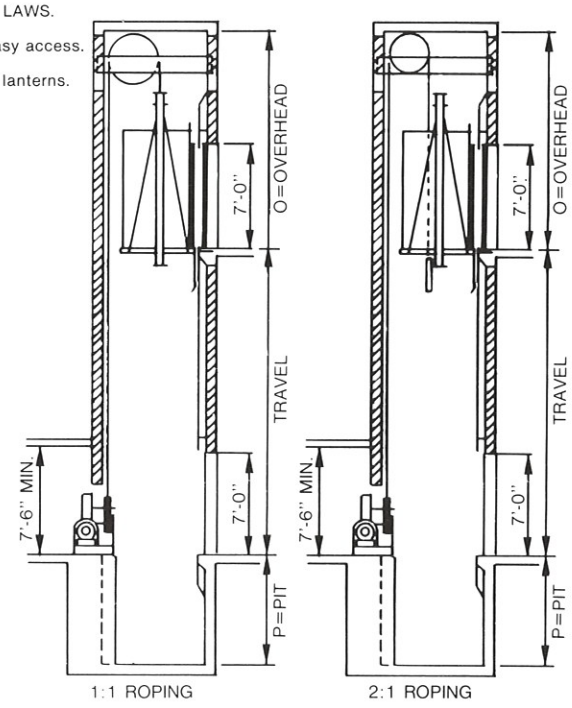

1:1 ROPING ARRANGEMENT
is used when only moderate overhead clearance is available, and only when a shallow pit depth is feasible.

RECOMMENDED SIZES & CAPACITIES

TYPE BUILDING	APARTMENT OR SMALL OFFICE	AVERAGE OFFICE HOTEL		LARGE OFFICE OR STORE
CAPACITY	2000#	2500#	3000#	3500#
A	6'- 0"	7'- 0"	7'- 0"	7'-0"
B	5'- 0"	5'- 0"	5'- 6"	6'-2"
C	3'- 0"	3'- 6"	3'- 6"	3'-6"
D	7'-10"	8'- 4"	8'- 4"	8'-4"
E	6'-10"	6'-10"	7'- 4"	8'-0"
F	5'- 5"	5'- 5"	5'-11"	6'-7"
G	11"	8"	8"	8"
H	11"	8"	8"	8"

RECOMMENDED MACHINE ROOM OVERHEAD & PIT DIMENSIONS

SPEED	100	200	250	300	350
L	10'-6"	10'-6"	10'-6"	10'-6"	10'- 6"
O	16'-7"	17'-1"	17'-5"	17'-6"	17'- 9"
P	4'-0"	4'-0"	4'-6"	4'-6"	5'- 1"

2:1 ROPING ARRANGEMENT
permits a minimum overhead installation. Because of the sheave arrangement, it is necessary to have a greater pit depth than for a comparable 1:1 installation.

RECOMMENDED SIZES & CAPACITIES

TYPE BUILDING	APARTMENT OR SMALL OFFICE	AVERAGE OFFICE HOTEL	
CAPACITY	2000#	2500#	3000#
A	6'- 0"	7'- 0"	7'- 0"
B	5'- 0"	5'- 0"	5'- 6"
C	3'- 0"	3'- 6"	3'- 6"
D	7'-10"	8'-10"	8'-10"
E	6'-10"	6'-10"	7'- 4"
F	5'- 5"	5'- 5"	5'-11"
G	10"	10"	10"
H	12"	12"	12"

RECOMMENDED MACHINE ROOM OVERHEAD & PIT DIMENSIONS

SPEED	100	200	250	300
L	10'-6"	10'-6"	10'- 6"	10'-6"
O	13'-0"	13'-2"	13'- 7"	13'-8"
P	5'-6"	6'-6"	6'-11"	7'-4"

NOTES:
1. Pit depths, overhead clearance and penthouse sizes are in accordance with ANSI/ASME code requirements. Local codes may vary these requirements.
2. Layouts and dimensions shown are for center opening type entrances.
3. Consult your Montgomery Representative for specific recommendations where space is limited or other conditions may necessitate further study.
4. All data is general. Consult your local Montgomery Representative for exact information for your working drawings.

service/passenger traction (hospital shape)

Service/Passenger (Hospital Shape) Traction Elevators are designed in a wide range of speeds for individual applications. Emergency and independent service as well as auxiliary power features are available.

HANDICAPPED REQUIREMENTS AVAILABLE TO MEET NEII STANDARDS, LOCAL CODES OR LAWS.
National Elevator Industry, Inc. (NEII) Handicapped Standards are:
Placement of car controls, hall buttons and phone (or intercommunication equipment) for easy access.
Tactile markings for operating switches, buttons and hoistway door jambs.
Handrails in car — dual ray door protection — audible signals in car position indicator and lanterns.

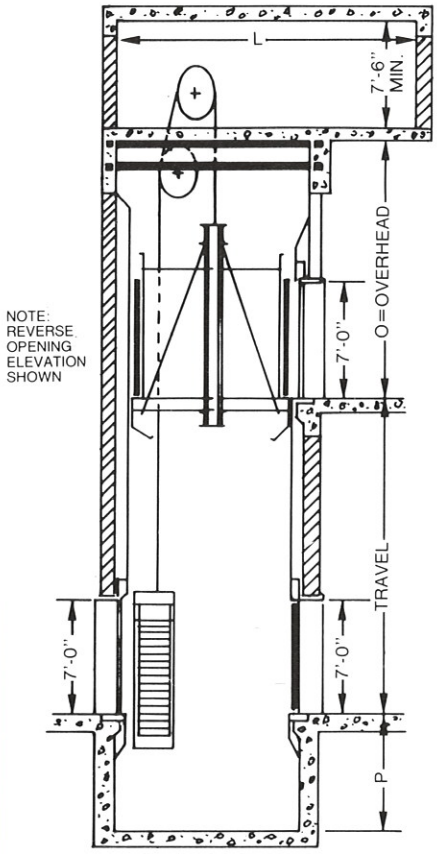

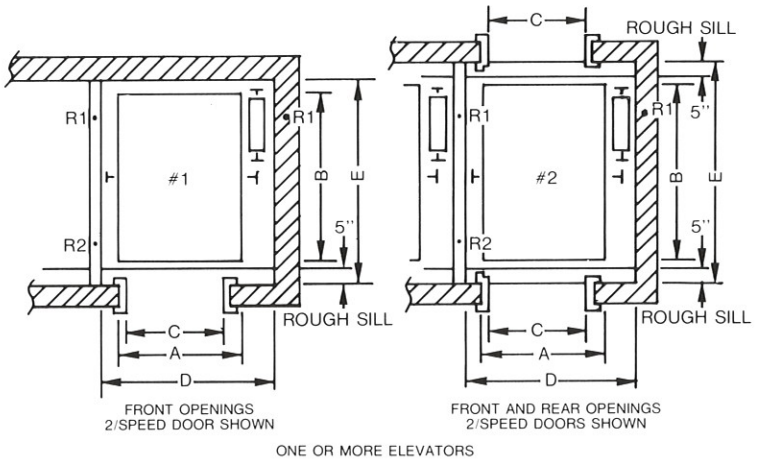

RECOMMENDED SIZES & CAPACITIES								
CAPACITY	3500#		4000#		4500#		5000#	
	#1	#2	#1	#2	#1	#2	#1	#2
A	5'-4"	5'-4"	5'-8"	5'-8"	5'-8"	5'-8"	6'-4"	6'-4"
B	8'-4"	9'-0"	8'-9"	9'-5"	9'-4"	10'-0"	8'-10"	9'-6"
C	3'-8"	3'-8"	4'-0"	4'-0"	4'-0"	4'-0"	4'-6"	4'-6"
D	7'-5"	7'-5"	7'-8"	7'-8"	7'-8"	7'-8"	8'-5"	8'-5"
E	9'-3"	10'-3½"	9'-8"	10'-8½"	10'-3"	11'-3½"	9'-9"	10'-9½"
MINIMUM PIT, OVERHEAD AND MACHINE ROOM DIMENSIONS								
SPEED	100		200		350		500	
L	18'-0"		18'-0"		18'-0"		19'-0"	
O	15'-6"		15'-9"		16'-6"		17'-7"	
P	4'-0"		4'-0"		5'-1"		6'-7"*	

* 7'-8" Pit required with cable compensation.

APPROXIMATE OVERHEAD LOADS/LBS. PER PASSENGER ELEVATOR		
CAPACITY	R-1	R-2
3500	28500	10500
4000	29500	11000
4500	30500	11500
5000	36000	15500

NOTES:
1. Reactions include allowances for impact but DO NOT include weight of concrete slab.
2. Pit depths, overhead clearance and penthouse sizes are in accordance with ANSI/ASME code requirements. Local codes may vary these requirements.
3. Layouts and dimensions shown are for two speed type entrances.
4. Consult your Montgomery Representative for specific recommendations where space is limited or other conditions may necessitate further study.
5. All data is general. Consult your local Montgomery Representative for exact information for your working drawings.

oil hydraulic

Oil Hydraulic Elevators are designed to meet varying performance requirements with car speeds to 200 feet per minute and maximum travel to 70 feet. They are easily adapted to most low rise buildings and frequently produce economic advantages over hoist rope traction elevators.

HANDICAPPED REQUIREMENTS AVAILABLE TO MEET NEII STANDARDS, LOCAL CODES OR LAWS.
National Elevator Industry, Inc. (NEII) Handicapped Standards are:
Placement of car controls, hall buttons and phone (or intercommunication equipment) for easy access.
Tactile markings for operating switches, buttons and hoistway door jambs.
Handrails in car — dual ray door protection — audible signals in car position indicator and lanterns.

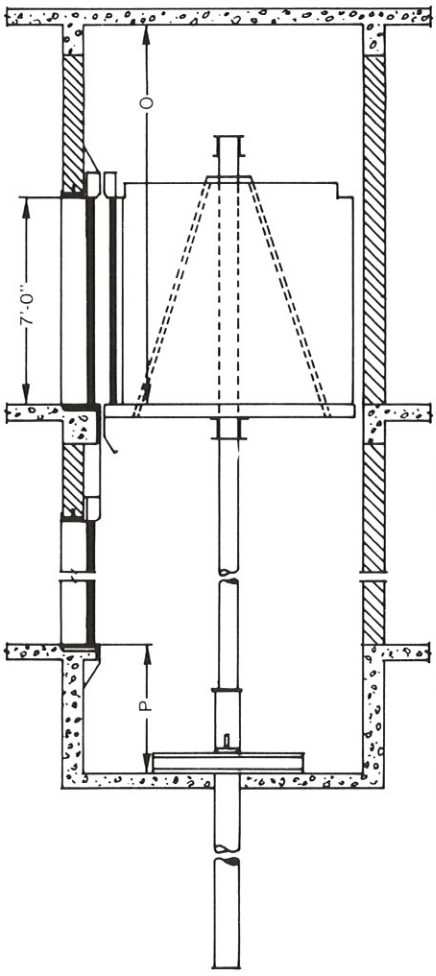

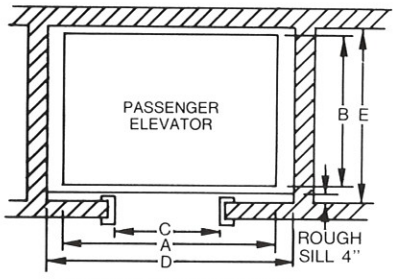

CENTER OPENING DOORS SHOWN—
SINGLE SLIDE DOOR OPTIONAL

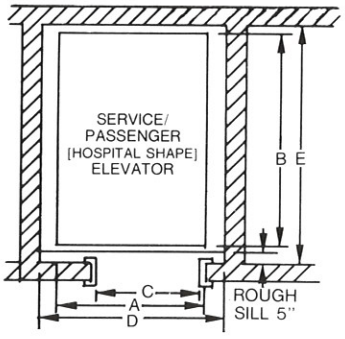

TWO SPEED DOORS SHOWN

FOR OFFICE BUILDINGS, HOTELS, MOTELS, APARTMENTS, BANKS, STORES, LIBRARIES, ETC.						HOSPITALS AND INSTITUTIONS							1 - Single Entrance 2 - Double Entrance
CAPACITY	1500#	2000#	2500#	3000#	3500#	CAPACITY	3500#		4000#		5000#		
							1	2	1	2	1	2	
A	4'-10"	6'-0"	7'-0"	7'-0"	8'-0"	A	5'-4"	5'-4"	5'-8"	5'-8"	6'- 4"	6'-4"	
B	5'- 0"	5'-0"	5'-0"	5'-6"	5'-6"	B	8'-4"	9'-0"	8'-9"	9'-5"	8'-10"	9'-6"	
C	2'- 8"	3'-0"	3'-6"	3'-6"	4'-0"	C	3'-8"	3'-8"	4'-0"	4'-0"	4'- 6"	4'-6"	
D	6'- 8"	7'-4"	8'-4"	8'-4"	9'-4"	D	6'-9"	6'-9"	7'-4"	7'-4"	8'- 0"	8'-0"	
E	5'- 9"	5'-9"	5'-9"	6'-3"	6'-3"	E	9'-3"	10'-3½"	9'-8"	10'-8½"	9'- 9"	10'-9½"	
O	13'- 0"	13'-0"	13'-0"	13'-0"	13'-0"	O	13'-0"	13'-0"	13'-0"	13'-0"	13'- 0"	13'-0"	
P	4'- 0"	4'-0"	4'-0"	4'-0"	4'-0"	P	4'-0"	4'-0"	4'-0"	4'-0"	4'- 0"	4'-0"	

NOTES:
1. A legal machine room meeting Code requirements and ventilated with temperature maintained between 65° and 100°F, must be provided. Machine room location preferably should be at the lowest landing adjacent to the hoistway. Machine room size varies depending on capacity and speed of elevator. Consult your Montgomery Representative for the exact size.
2. Pit depths and overhead clearances are in accordance with ANSI/ASME code requirements. Local codes may vary these requirements.
3. Layout and dimensions shown for passenger elevators based on center opening type entrances and for hospital elevators based on two speed type entrances.
4. Consult your local Montgomery Office for more information regarding Notes 1 and 2.
5. All data is general. Consult your local Montgomery Representative for exact information for your working drawings.

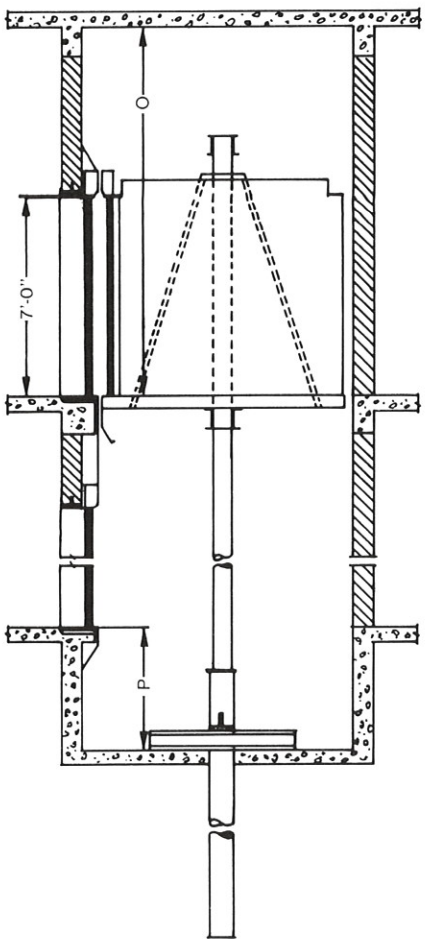

ELEVATION

SPM® standard pre-manufactured (inground) oil hydraulic

SPM® Oil Hydraulic Elevators meet Montgomery's high standards of quality. STANDARD equipment is PRE-MANUFACTURED in six sizes, with the advantages of quick delivery, low cost and reliable service while maintaining "custom" quality. SPM's offer travel to six floors and car speeds to 150 fpm. Montgomery SPM's offer flexibility in entrance and fixture selection and optional decor and finishes.

SPM® Oil Hydraulic Elevators are furnished with Montgomery MIPROM® microprocessor logic control for high reliability, economy and programmable flexibility.

HANDICAPPED REQUIREMENTS AVAILABLE TO MEET NEII STANDARDS, LOCAL CODES OR LAWS.
National Elevator Industry, Inc. (NEII) Handicapped Standards are:
Placement of car controls, hall buttons and phone (or intercommunication equipment) for easy access.
Tactile markings for operating switches, buttons and hoistway door jambs.
Handrails in car — dual ray door protection — audible signals in car position indicator and lanterns.

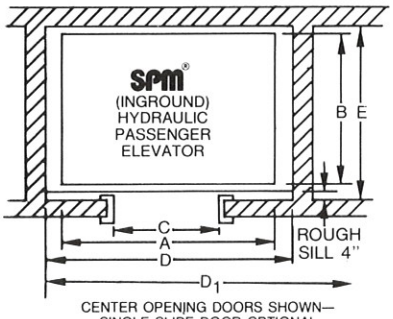

CENTER OPENING DOORS SHOWN—
SINGLE SLIDE DOOR OPTIONAL

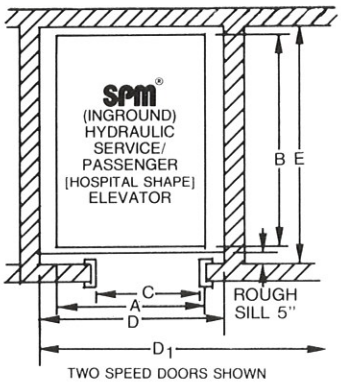

TWO SPEED DOORS SHOWN

CAPACITIES - SPEEDS - GENERAL ARRANGEMENTS - SPACE REQUIREMENTS							
MODEL		SPM-H 1500	SPM-H 2000	SPM-H 2500	SPM-H 3000	SPM-H 3500	SPM-H 4000
TYPE		(INGROUND)	(INGROUND)	(INGROUND)	(INGROUND)	(INGROUND)	(INGROUND)
SERVICE		PASSENGER	PASSENGER	PASSENGER	PASSENGER	PASSENGER	HOSPITAL/ SERVICE
CAPACITY		1500#	2000#	2500#	3000#	3500#	4000#
SPEED (FPM)		125	125	125 & 150	125 & 150	125 & 150	150
MAX. TRAVEL		41'- 0"	38'-0"	36'-0" @ 125 52'-0" @ 150	36'-0" @ 125 50'-0" @ 150	36'-0" @ 125 48'-0" @ 150	53'-0"
MAX. LANDINGS		5	5	5 @ 125 6 @ 150	5 @ 125 6 @ 150	5 @ 125 6 @ 150	6
ALPHABETICAL DIMENSIONS	A	4'-10"	6'-0"	7'-0"	7'-0"	7'- 0"	5'-8"
	B	5'- 0"	5'-0"	5'-0"	5'-6"	6'- 2"	8'-9"
	C	2'- 8"	3'-0"	3'-6"	3'-6"	3'- 6"	4'-0"
	D (1 CAR)	6'- 8"	7'-4"	8'-4"	8'-4"	8'- 4"	7'-4"
	D1 (2 CAR)	N/A	N/A	17'-0"	17'-0"	17'- 0"	15'-0"
	E	5'- 9"	5'-9"	5'-9"	6'-3"	6'-11"	9'-8"
	O (125 FPM)	12'- 4"	12'-4"	12'-4"	12'-4"	12'- 4"	N/A
	O (150 FPM)	N/A	N/A	12'-6"	12'-6"	12'- 6"	12'-6"
CLEAR CAR SIZE (WIDE x DEEP)		4'-6" x 4'-3"	5'-8" x 4'-3"	6'-8" x 4'-3"	6'-8" x 4'-9"	6'-8" x 5'-5"	5'-4" x 7'-11"
MACHINE ROOM (WIDE x DEEP)							
1 CAR @ 125		8'-4" x 5'-3"	8'-4" x 5'-3"	8'-4" x 5'-3"	9'-0" x 6'-0"	9'-0" x 6'-0"	---
1 CAR @ 150		N/A	N/A	9'-0" x 6'-0"	9'-0" x 6'-0"	9'-0" x 6'-0"	9'-6" x 6'-2"
2 CAR @ 125		N/A	N/A	17'-0" x 6'-0"	17'-0" x 6'-0"	17'-0" x 6'-0"	---
2 CAR @ 150		N/A	N/A	17'-0" x 6'-0"	17'-0" x 6'-0"	17'-0" x 6'-0"	12'-0" x 10'-0"
MACHINE ROOM CLEAR HEIGHT		7'-6" MINIMUM					
HOISTWAY ENTRANCE TYPES (All 7'-0" H):							
STANDARD		SINGLE SLIDE R/H SINGLE SLIDE L/H	SINGLE SLIDE R/H SINGLE SLIDE L/H	CENTER OPENING SINGLE SLIDE R/H	CENTER OPENING SINGLE SLIDE R/H	CENTER OPENING SINGLE SLIDE R/H	TWO SPEED R/H TWO SPEED L/H
OPTIONAL		---	CENTER OPENING	SINGLE SLIDE L/H	SINGLE SLIDE L/H	SINGLE SLIDE L/H	---
OPTIONAL							

NOTES:
1. A legal machine room meeting code requirements and ventilated with temperature between 65° and 100°F, must be provided.
2. Pit depth and overhead clearance are in accordance with ANSI/ASME code requirements. Local codes may vary these requirements.
3. Consult your local Montgomery Office for more information regarding Notes 1 and 2.
4. All data is general. Consult your local Montgomery Representative for exact information for your working drawings.
5. For complete details ask your local Montgomery Office for SPM brochure SF2043-R18.
6. R/H = RIGHT HAND
   (i.e. Standing in car facing door door OPENS to right.)
   L/H = LEFT HAND

montgomery®

SPM® standard pre-manufactured HOLELESS oil hydraulic

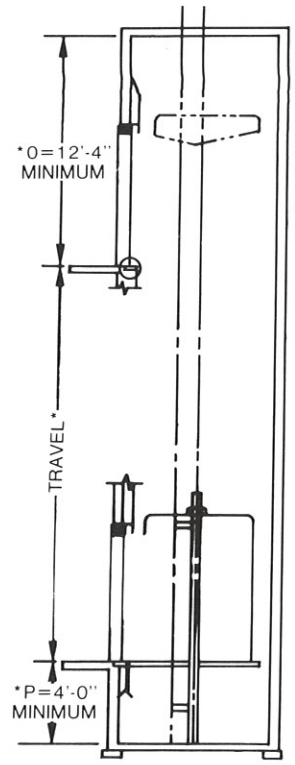

ELEVATION
SPM® HOLELESS ELEVATOR

*NOTE:
At 100 FPM (travel over 12'-3")—OR—
125 FPM (travel over 11'-9")— — — —
Pit and/or Overhead must INCREASE by an amount equal to the ADDITIONAL TRAVEL.

STANDARD PRE-MANUFACTURED (SPM) Holeless Oil Hydraulic Elevators meet Montgomery's high standards of quality. SPM Holeless Elevators are available in FOUR sizes. They have the advantage of quick delivery, low cost and reliable service while maintaining "custom" quality. SPM Holeless Elevators offer travel to three floors with car speeds of 100 FPM and 125 FPM. They offer flexibility in entrance and fixture selection with optional decor and finishes.

SPM® Holeless Oil Hydraulic Elevators are furnished with Montgomery MIPROM® Microprocessor Logic Control for high reliability, economy and programmable flexibility.

HANDICAPPED REQUIREMENTS AVAILABLE TO MEET NEII STANDARDS, LOCAL CODES OR LAWS.
National Elevator Industry, Inc. (NEII) Handicapped Standards are:
Placement of car controls, hall buttons and phone (or intercommunication equipment) for easy access.
Tactile markings for operating switches, buttons and hoistway door jambs.
Handrails in car — dual ray door protection — audible signals in car position indicator and lanterns.

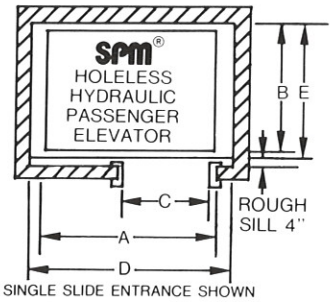

SINGLE SLIDE ENTRANCE SHOWN

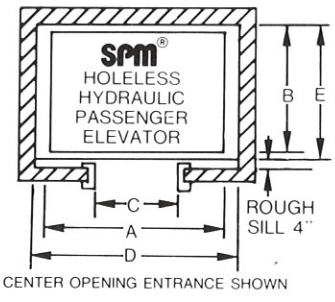

CENTER OPENING ENTRANCE SHOWN

NOTES:
1. A legal machine room meeting code requirements and ventilated with temperature between 65° and 100°F, must be provided.
2. Pit depth and overhead clearance are in accordance with ANSI/ASME code requirements. Local codes may vary these requirements.
3. Consult your local Montgomery Office for more information regarding Notes 1 and 2.
4. All data is general. Consult your local Montgomery Representative for exact information for your working drawings.
5. For complete details ask your local Montgomery Office for SPM Holeless Brochure SF2386-258.
6. R/H = RIGHT HAND
   (i.e. Standing in car facing door door OPENS to right.)
   L/H = LEFT HAND

CAPACITIES - SPEEDS - GENERAL ARRANGEMENTS - SPACE REQUIREMENTS					
MODEL		SPM-H 1500	SPM-H 2000	SPM-H 2500	SPM-H 3000
TYPE		**HOLELESS**	**HOLELESS**	**HOLELESS**	**HOLELESS**
SERVICE		PASSENGER	PASSENGER	PASSENGER	PASSENGER
CAPACITY		1500#	2000#	2500#	3000#
SPEED (FPM)		100 & 125	100 & 125	100 & 125	100 & 125
MAX. TRAVEL		20'-0"	20'-0"	20'-0"	20'-0"
MAX. LANDINGS		3	3	3	3
ALPHABETICAL DIMENSIONS	A	4'-10"	6'-0"	7'-0"	7'-0"
	B	5'- 0"	5'-0"	5'-0"	5'-6"
	C	2'- 8"	3'-0"	3'-6"	3'-6"
	D	6'- 8"	7'-4"	8'-4"	8'-4"
	E	5'- 9"	5'-9"	5'-9"	6'-3"
CLEAR CAR SIZE (WIDE X DEEP)		4'-6" × 4'-3"	5'-8" × 4'-3"	6'-8" × 4'-3"	6'-8" × 4'-9"
MACHINE ROOM (WIDE × DEEP)	100 FPM	8'-4" × 5'-3"	8'-4" × 5'-3"	8'-4" × 5'-3"	9'-0" × 6'-0"
	125 FPM	8'-4" × 5'-3"	8'-4" × 5'-3"	9'-0" × 6'-0"	9'-0" × 6'-0"
MACHINE ROOM CLEAR HEIGHT		7'-6" MINIMUM			
HOISTWAY ENTRANCE TYPES (ALL 7'-0" H):	STANDARD	SINGLE SLIDE R/H SINGLE SLIDE L/H	SINGLE SLIDE R/H SINGLE SLIDE L/H	CENTER OPENING SINGLE SLIDE R/H	CENTER OPENING SINGLE SLIDE R/H
	OPTIONAL		CENTER OPENING	SINGLE SLIDE L/H	SINGLE SLIDE L/H
	OPTIONAL	— — —			

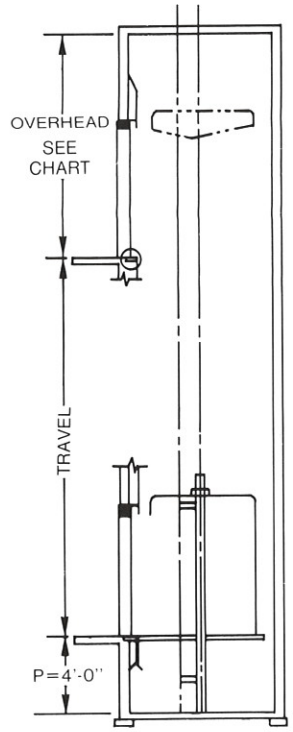

ELEVATION
HH-II™ HOLELESS ELEVATOR

HH-II™ holeless oil hydraulic

HH-II Holeless Oil Hydraulic Elevators offer very competitive pricing as well as extremely short lead time for fabrication, shipment and installation. The HH-II line of Holeless Oil Hydraulic Elevators is offered in two sizes; each designed to service two landings in line. Car speeds of 80 FPM and 125 FPM are available. All necessary approvals are accomplished on a single sheet!

Because of the broad range of STANDARD FEATURES on the HH-II, Montgomery is able to fabricate and ship all necessary material in as little as six weeks from the date of order and approval receipt. However, there is no sacrifice in the flexibility of entrance and decor options to "customize" your HH-II Holeless Oil Hydraulic Passenger Elevator.

HANDICAPPED REQUIREMENTS AVAILABLE TO MEET NEII STANDARDS, LOCAL CODES OR LAWS.
National Elevator Industry, Inc. (NEII) Handicapped Standards are:
Placement of car controls, hall buttons and phone (or intercommunication equipment) for easy access.
Tactile markings for operating switches, buttons and hoistway door jambs.
Handrails in car — dual ray door protection — audible signals in car position indicator and lanterns.

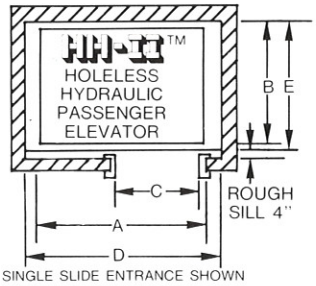

SINGLE SLIDE ENTRANCE SHOWN

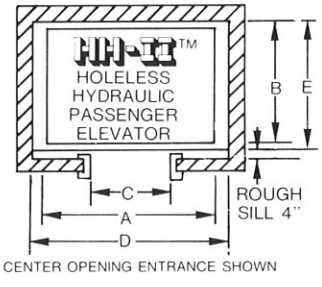

CENTER OPENING ENTRANCE SHOWN

HH-II™ EXTENDED TRAVEL

MONTGOMERY'S HH-II ELEVATOR TECHNOLOGY PROVIDING TOTAL STANDARDIZATION, VERY COMPETITIVE PRICING & SHORT MANUFACTURING/INSTALLATION LEAD TIMES IS NOW AVAILABLE FOR THREE LANDING AND/OR EXTENDED TRAVEL APPLICATIONS.

CONTACT YOUR MONTGOMERY REPRESENTATIVE FOR INFORMATION ON THE:

HH-II™ EXTENDED TRAVEL HOLELESS OIL HYDRAULIC PASSENGER ELEVATOR SERVING THREE LANDINGS AND UP TO 20'-0" OF TRAVEL.

CAPACITIES · SPEEDS · GENERAL ARRANGEMENTS · SPACE REQUIREMENTS			
MODEL		HH-II-2000	HH-II-2500
TYPE		HOLELESS	HOLELESS
SERVICE		PASSENGER	PASSENGER
CAPACITY		2000#	2500#
SPEED (FPM)		80 & 125	80 & 125
MIN. TRAVEL		8'-4"	8'-4"
MAX. TRAVEL		15'-0"	15'-0"
MAX. LANDINGS		2 Inline	2 Inline
ALPHABETICAL DIMENSIONS	A	6'-0"	7'-0"
	B	5'-0"	5'-0"
	C	3'-0"	3'-6"
	D	7'-4"	8'-4"
	E	5'-9"	5'-9"
CLEAR OVERHEAD 80 FPM		Travel from 8'-4" to 12'-3": O = 12'-4" Travel from 12'-4" to 15'-0": O = TRAVEL + 1"	
CLEAR OVERHEAD 125 FPM		Travel from 8'-4" to 11'-9": O = 12'-4" Travel from 11'-10" to 15'-0": O = TRAVEL + 7"	
CLEAR CAR SIZE (WIDE x DEEP)		5'-8" x 4'-3"	6'-8" x 4'-3"
MACHINE ROOM (WIDE x DEEP)		7'-6" x 5'-0"	7'-6" x 5'-0"
MACHINE ROOM CLEAR HEIGHT		7'-6" MINIMUM	
HOISTWAY ENTRANCE TYPES (ALL 7'-0" H):			
STANDARD		SINGLE SLIDE R/H	SINGLE SLIDE R/H
OPTIONAL		SINGLE SLIDE L/H	SINGLE SLIDE L/H
OPTIONAL		CENTER OPENING	CENTER OPENING

NOTES:
1. A legal machine room meeting code requirements and ventilated with temperature between 65° and 100°F must be provided.
2. Pit depth and overhead clearance are in accordance with ANSI/ASME code requirements. Local codes may vary these requirements.
3. Consult your local Montgomery Office for more information regarding Notes 1 and 2.
4. All data is general. Consult your local Montgomery Representative for exact information for your working drawings.
5. For complete details ask your local Montgomery Office for HH-II Holeless Brochure SF2393-R85.
6. R/H = RIGHT HAND
   (i.e. Standing in car facing door Door OPENS to right.)
   L/H = LEFT HAND

montgomery® CARS, SIGNALS AND PUSHBUTTON FIXTURES

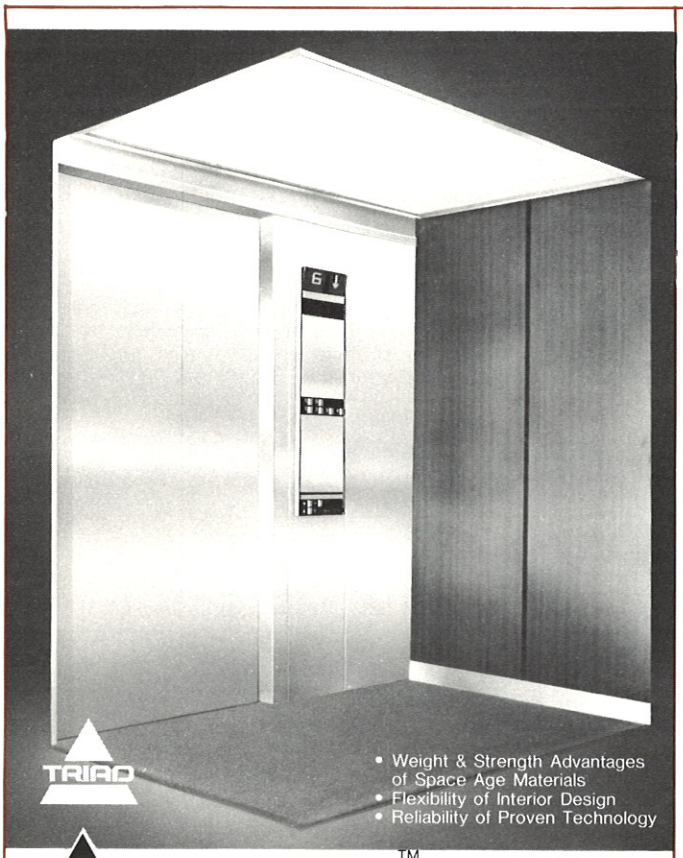

The TRIAD car is standard on the MEGATECH™ vertical transportation system. (See page 6)

VECTOR™ FIXTURE SYSTEM

The latest advance in data signal control.

Available on MEGATECH™ (See page 6)

Also available on other Montgomery models.

The VECTOR™ fixture system includes car station with integral service cabinet & telephone cabinet (if req'd), auxiliary car station, car and/or hall digital position indicators, hall lanterns, car direction signs, hall pushbutton stations, etc. (All designed in compliance with applicable codes.)

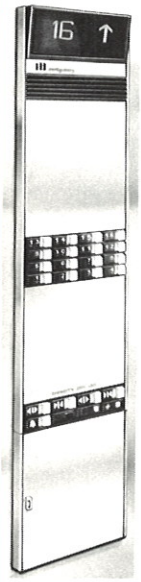

Car station
(Shown with integral telephone/service cabinet)

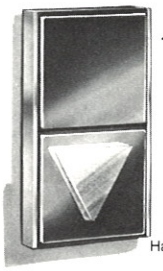

◀ Hall lantern/car direction sign

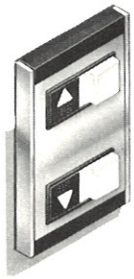

Hall pushbutton station ▶

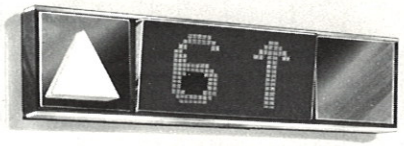

Combination hall lantern/digital readout position indicator

This fully integrated fixture system combines the highest quality materials and workmanship with micro-circuited intra-fixture logic producing millisecond data generation, processing & response.

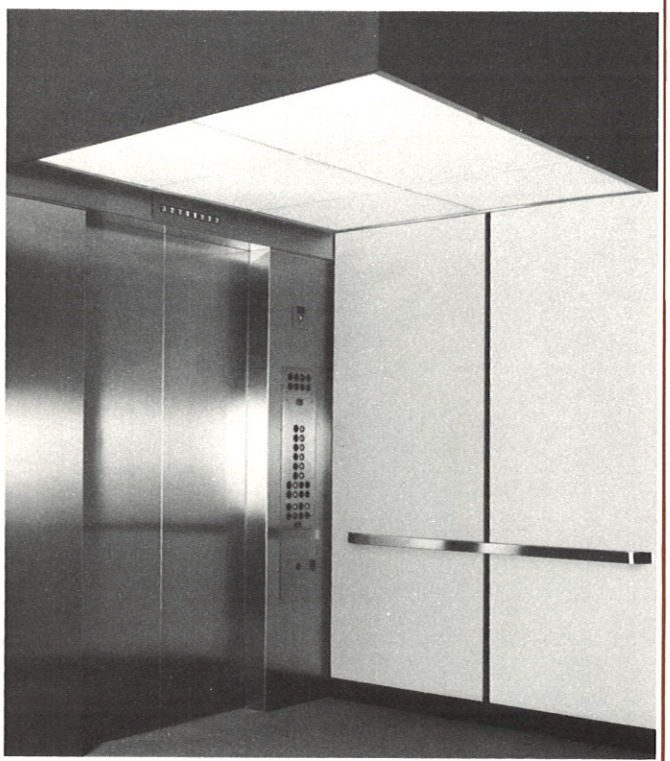

Montgomery standard car designs as well as custom car designs are available in a wide range of designs and materials. Contact your local Montgomery Representative for details.

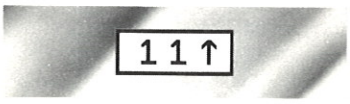

DIGITAL ELECTRONIC CAR POSITION INDICATOR
Optional digital readout hall position indicator is identical. The single direction arrow changes to show opposite direction.

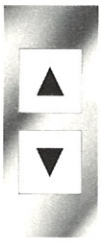

CAR OPERATING PANEL ▶
Floor buttons illuminate when pressed to indicate calls registered. Tactile markings are included. OPTIONAL AUXILIARY OPERATING PANEL is similar to this fixture.

◀ OPTIONAL HALL LANTERN
Horizontal type also available. OPTIONAL CAR DIRECTION SIGN located in car jamb to meet handicapped requirements.

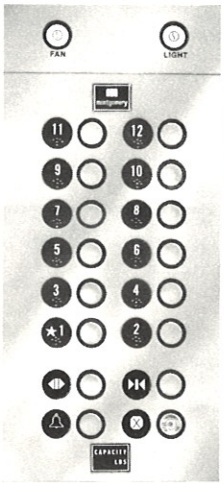

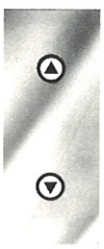

◀ HALL OPERATING BUTTONS
Floor buttons illuminate when pressed to indicate calls are registered.

OPTIONAL TELEPHONE/ SERVICE CABINET ▶
Placed below car operating panel. Key operated fan, light and other service switches are placed in this cabinet. When not furnished, the key operated switches are placed in the Car Operating Panel as illustrated.

MONTGOMERY'S TRADITIONAL LINE OF SIGNAL AND PUSHBUTTON FIXTURES

PASSENGER ENTRANCES

Montgomery standard entrances, as shown, are available in a wide range of finishes and materials. Custom entrances are also available. Contact your local Montgomery Representative for details.

NOTE: Wherever possible, front hoistway walls should not be erected until after door equipment is installed.

ROUGH OPENING (for standard unit-type frames):
Width of door opening plus 8" on each side. Height of door opening plus 8" above.

single speed slide

Maximum opening width approximately 1/2 width of car. Opening width should not exceed 3'-6". Provides a sliding door at moderate cost.

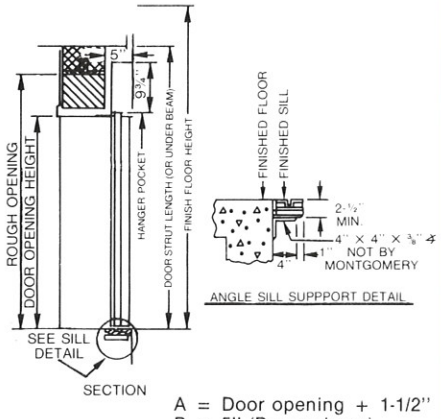

A = Door opening + 1-1/2"
B = 5" (Power doors)

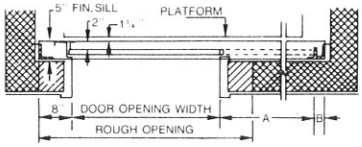

two speed slide

Door opening is approximately 2/3 width of car.

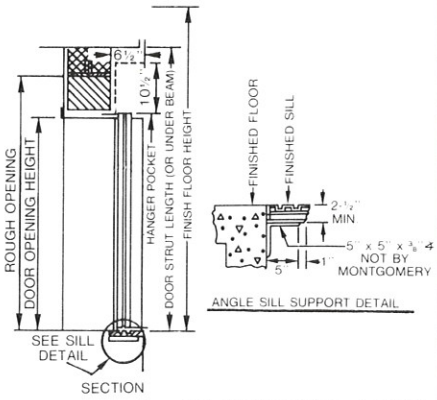

A = 1/2 Door opening + 1-1/8"
B = 5" (Power doors)

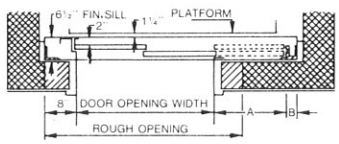

center opening slide

Opening is approximately 1/2 width of car. Simultaneous opening of each door panel, at equal speed, reduces opening time to 1/2 that required for other types of sliding doors.

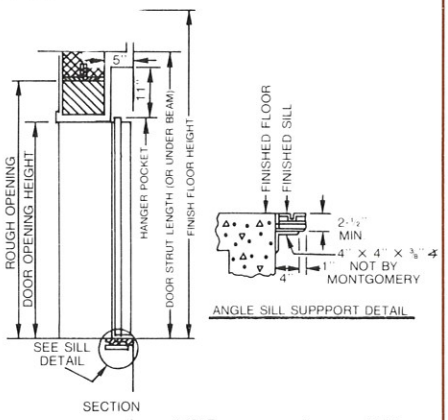

A = 1/2 Door opening + 3/4"
B = 5" (Power doors)

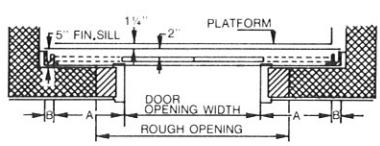

freight doors

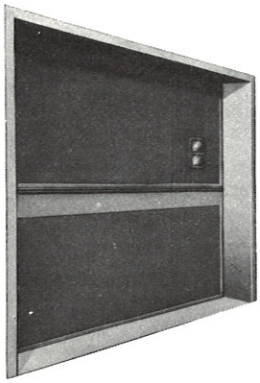

regular type door

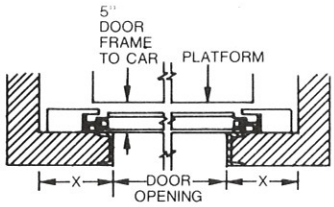

pass type door

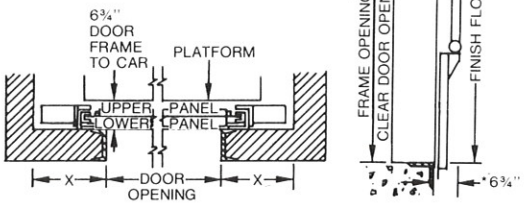

NOTE:
FREIGHT DOOR FRAMES AND SILLS NOT BY MONTGOMERY.

MINIMUM FLOOR HEIGHT BASED ON OPENING HEIGHT OF DOOR		
OPENING HEIGHT OF DOOR	REGULAR TYPE DOOR	*PASS TYPE DOOR
6'-6"	10'-3"	9'-3"
7'-0"	11'-0"	9'-9"
7'-6"	11'-9"	10'-3"
8'-0"	12'-6"	10'-9"
8'-6"	13'-3"	11'-3"
9'-0"	14'-0"	11'-9"
10'-0"	15'-6"	12'-9"

*Minimum floor heights shown for pass type doors may be reduced by using special constructed doors. Consult your local Montgomery Representative for exact information for your drawings.

DIMENSION KEY

X —13" minimum return required for motorized door of either type shown.

X —10" minimum return required for manual door of either type shown. Minimum pit depth = 1/2 door height plus 6". Pit depth for door may be more or less than pit depth required for elevator, depending on height of door. Door frames must extend to the floor beam above unless walls are poured concrete or brick.

traction

Traction Freight Elevators meet and exceed the heavy duty requirements of freight type loading. Special applications are available to meet unusual and hazardous conditions. As an optional feature we recommend our Lodemaster, an automatic load weighing device, which warns against overloading. Also recommended are power operated hoistway doors and car gates for medium and heavy duty installations.

For freight door details see page 15.

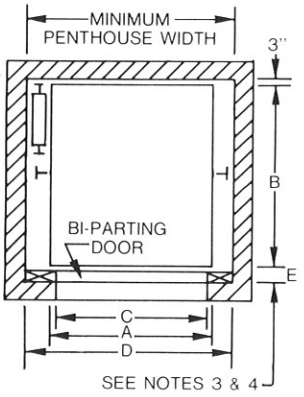

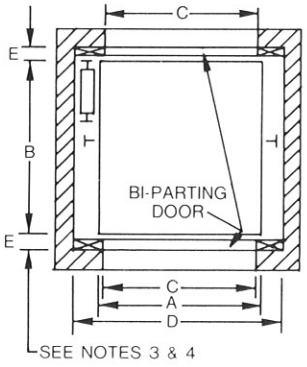

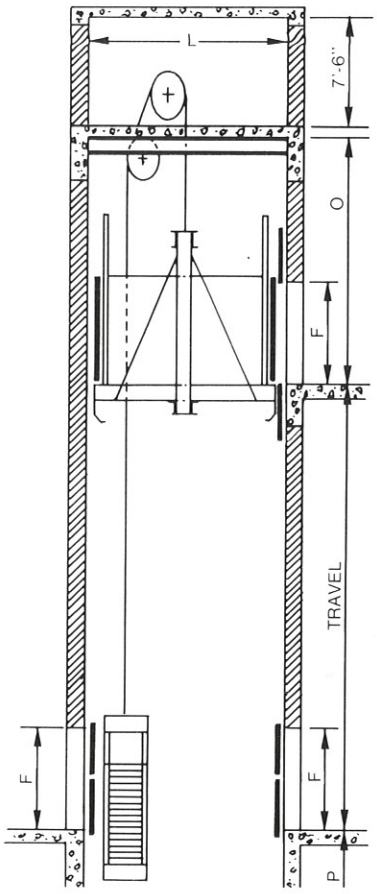

For further information regarding ANSI/ASME Freight Elevator Loading Classifications (Classes A, B, C-1, C-2 & C-3) consult your local Montgomery Representative.

LIGHT AND MEDIUM DUTY FREIGHT ELEVATORS					
CAPACITY	2500#	3000#	4000#	6000#	8000#
A	5'-4"	6'-4"	6'-4"	8'-4"	8'-4"
B	7'-0"	8'-0"	8'-0"	10'-0"	10'-0"
C	5'-0"	6'-0"	6'-0"	8'-0"	8'-0"
D	7'-4"	8'-4"	8'-4"	10'-4"	10'-10"
L	13'-0"	14'-0"	14'-0"	14'-0"	14'-0"

HEAVY DUTY POWER TRUCK LOADING FREIGHT ELEVATORS					
CAPACITY	10,000#	12,000#	16,000#	18,000#	20,000#
A	8'-4"	10'-4"	10'-4"	10'-4"	12'-4"
B	12'-0"	14'-0"	14'-0"	16'-0"	20'-4"
C	8'-0"	10'-0"	10'-0"	10'-0"	12'-0"
D	11'-4"	13'-6"	14'-0"	14'-2"	16'-6"
L	14'-0"	15'-0"	15'-0"	17'-0"	21'-0"

MINIMUM PIT & OVERHEAD DIMENSIONS FOR LIGHT & MEDIUM DUTY FREIGHT ELEVATORS				
CAR SPEED	50	75	100	200
O	16'-0"	16'-0"	16'-0"	16'-0"
P	5'-6"	5'-6"	5'-6"	6'-0"

MINIMUM PIT & OVERHEAD DIMENSIONS FOR HEAVY DUTY POWER TRUCK FREIGHT ELEVATORS				
CAR SPEED	50	75	100	200
O P	Consult your Montgomery Representative			

NOTES:
1. Pit depths, overhead clearance and penthouse sizes are in accordance with ANSI/ASME code requirements. Local codes may vary these requirements.
2. For capacities over 20,000 lbs. or speeds over 200 f.p.m., consult your Montgomery Representative.
3. Dimensions E = 5" for regular type counter balanced hoistway doors and 6¾" for pass type counter balanced hoistway doors.
4. Pass type hoistway doors are required when floor heights are less than 11'-0" for 7'-0" openings and less than 14'-0" for 9'-0" openings. See chart on page 15 for other door sizes.
5. Dimension F = 7'-0" on light & medium duty and 8'0" (or as required) for heavy duty doors. Doors higher than 8'-0" require additional overhead height.
6. For large heavy duty doors consult your Montgomery Representative.
7. All data is general. Consult your local Montgomery Representative for exact information for your working drawings.
8. For reactions, consult your local Montgomery Representative.

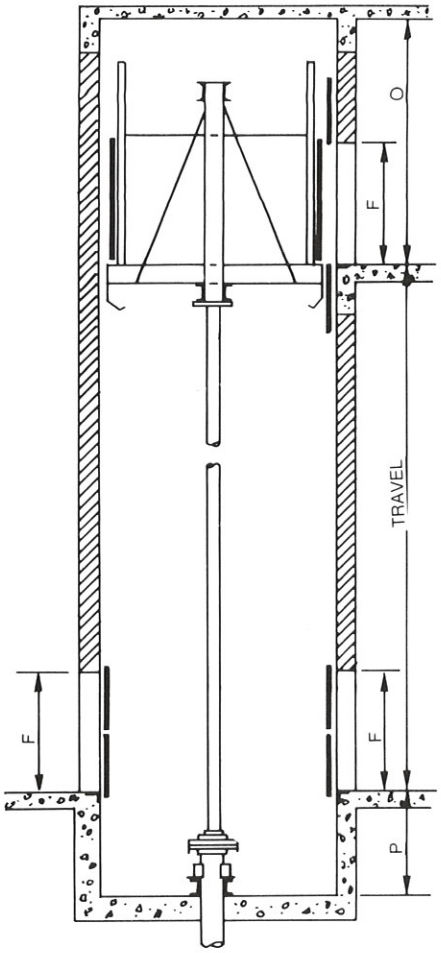

oil hydraulic

Oil Hydraulic Freight Elevators are recommended for nominal speed and travel requirements. Features of this type elevator include minimum hoistway clearances, economical design of the hoistway and elimination of the overhead machine room. The recommended machine room location is at the lowest landing adjacent to the hoistway, but can be located in a semi-remote area from the hoistway.

For freight door information see page 15.

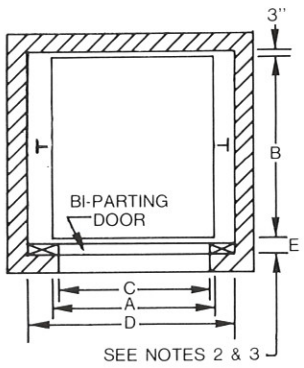

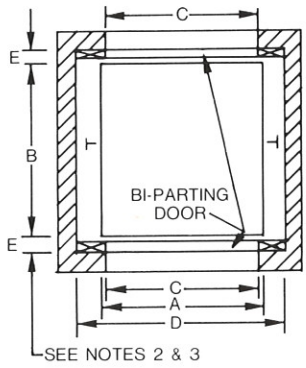

For further information regarding ANSI/ASME Freight Elevator Loading Classifications (Classes A, B, C-1, C-2 & C-3) consult your local Montgomery Representative.

LIGHT AND MEDIUM DUTY FREIGHT ELEVATORS						
CAPACITY	2000#	3000#	4000#	5000#	6000#	8000#
A	5'- 0"	5'- 6"	6'- 6"	8'- 6"	8'-6"	8'-6"
B	6'- 0"	7'- 0"	8'- 0"	10'- 0"	12'-0"	12'-0"
C	4'- 8"	5'- 2"	6'- 2"	8'- 2"	8'-2"	8'-2"
D-manual doors	6'- 4"	6'-10"	7'-10"	9'-10"	10'-0"	10'-6"
D-power doors	6'-10"	7'- 4"	8'- 4"	10'- 4"	10'-6"	10'-6"
O-7'0" high doors	13'- 2"	13'- 2"	13'- 2"	13'- 2"	13'-2"	13'-2"
O-8'-0" high doors	14'- 2"	14'- 2"	14'- 2"	14'- 2"	14'-2"	14'-2"
P	4'- 6"	4'- 6"	4'- 6"	4'- 6"	4'-6"	5'-0"

HEAVY DUTY POWER TRUCK LOADING FREIGHT ELEVATORS					
CAPACITY	10,000#	12,000#	16,000#	18,000#	20,000#
A	10'-6"	10'-6"	10'-6"	10'-6"	12'-6"
B	14'-0"	14'-0"	16'-0"	16'-0"	20'-0"
C	10'-2"	10'-2"	10'-2"	10'-2"	12'-2"
D-manual doors	12'-6"	12'-6"	12'-6"	12'-6"	14'-6"
D-power doors	12'-6"	12'-6"	12'-6"	12'-6"	14'-6"
O-7'-0" high doors	13'-2"	13'-2"	13'-2"	13'-2"	13'-2"
O-8'-0" high doors	14'-2"	14'-2"	14'-2"	14'-2"	14'-2"
P	6'-0"	6'-0"	6'-0"	6'-0"	6'-0"

NOTES:
1. Dimensions O and P are based on car speeds up to 150 fpm.
2. Dimension E = 5" for regular type counter balanced hoistway doors and 6¾" for pass type counter balanced hoistway doors.
3. Pass type hoistway doors are required when floor heights are less than 11'-0" for 7'-0" openings and less than 14'-0" for 9'-0" openings. See chart on page 15 for other door sizes.
4. Dimension F = 7'-0" on light and medium duty, 8'-0" or as required for heavy duty.
5. A legal machine room meeting Code requirements and ventilated with temperature maintained between 65° and 100°F, must be provided. Machine room location preferably should be at the lowest landing adjacent to the hoistway. Machine room size varies depending on capacity and speed of elevator. Consult your Montgomery Representative for the exact size.
6. Pit depths and overhead clearances are in accordance with ANSI/ASME code requirements. Local codes may vary these requirements.
7. Layout and dimensions shown for freight elevators based on bi-parting counter-balanced type hoistway doors.
8. Consult your local Montgomery Office for more information regarding Notes 5 and 6.
9. For capacities over 20,000 lbs. and for large heavy duty doors, consult your Montgomery Representative.
10. All data is general. Consult your Montgomery Representative for exact information for your working drawings.
11. For reactions, consult your local Montgomery Representative.

dumbwaiters

Montgomery has Dumbwaiters for every need including Standard Electric Traction and Drum Machine models. These Dumbwaiters are manufactured to rigid high standards of quality. Standard operation is Automatic Call & Send. For complete details ask your local Montgomery Representative for Montgomery's Brochure SF2048-R289.

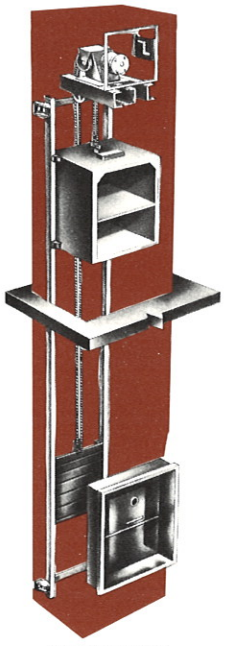

TRACTION DRIVE
COUNTER HEIGHT LOADING

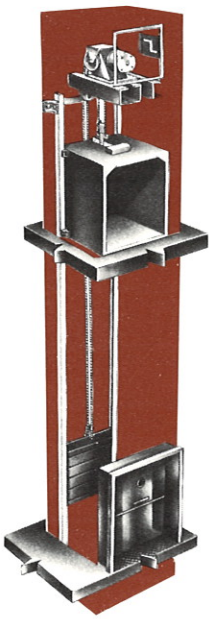

TRACTION DRIVE
FLOOR LEVEL LOADING

ELECTRIC DRUM DRIVE
COUNTER HEIGHT LOADING

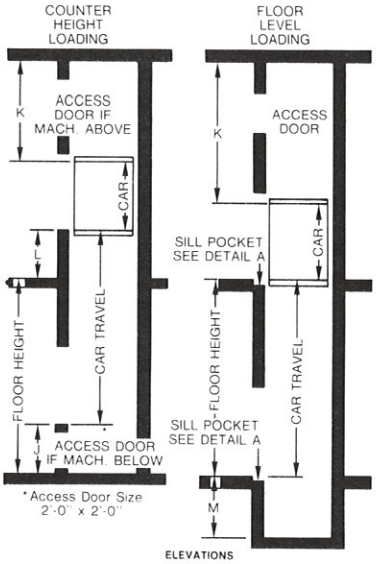

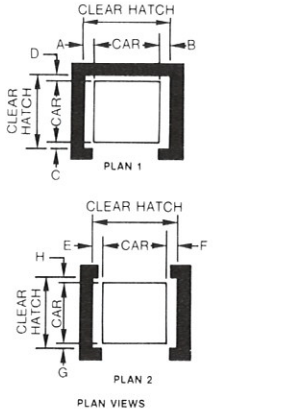

Detail A
Sill pocket — required at all floors for dumbwaiters that load and unload at floor level.

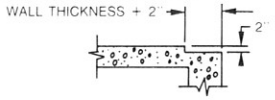

HIGH SPEED TRACTION DRIVE
MODELS: 1401 & 1402
HIGH RISE APPLICATION (6-7-8 Indg.)
TOP-OF-THE-LINE
SPEED: 100 FPM to 150 FPM
(greater on request)
CAPACITIES: 200 lbs. to 500 lbs.

HEAVY DUTY TRACTION DRIVE
MODELS: 1405 & 1406
Wheeled truck loading application.
A substitute for small cargo elevators in commercial, industrial and research buildings, piers, warehouses, libraries, etc.
SPEED: 50 FPM to 150 FPM

MODERATE SPEED
ELECTRIC DRUM DRIVE
LETTER LIFT
TRAVEL: Up to 35'-0"
SPEED: 50 FPM
STANDARD CAR SIZES:
15" W. x 15" D. x 18" H.
— or —
20" W. x 20" D. x 18" H.

MODERATE SPEED TRACTION DRIVE
MODELS: 1431 & 1432
2 to 6 landing application.
i.e. Restaurants, apartments, hospitals, hotels, banks, offices, etc.
Heavy duty guide rail columns support machine (if overhead) and transmit down load weight to bottom of hoistway.
SPEED: 50 FPM
CAPACITIES: 75 lbs. to 500 lbs.

MODERATE SPEED
ELECTRIC DRUM DRIVE
MODELS: 1420 & 1421 (counterheight)
1422 & 1423 (floor level)
TRAVEL: Up to 35'-0"
Ideal for non-load bearing walls. These models support and transmit all down loads to bottom of hoistway.
SPEED: 50 FPM
CAPACITIES: 150 lbs. to 500 lbs.

NOTE:
Except for Models 1441 and 1442 (letter lift), optional car sizes are available up to 9 square feet of floor area and up to 4'-0" in height.

	DIMENSION KEY (ALL IN INCHES)													
				PLAN 1 OPENINGS FRONT ONLY				PLAN 2 OPENINGS FRONT & REAR				ELEVATIONS			
	MODEL NO.	TYPE OF MACHINE	MACHINE LOCATION	A	B	C	D	E	F	G	H	J	K	L	M**
COUNTER HEIGHT LOADING	1401	Traction	Above	6½	5½	3	6½	6½	5½	3	3	30	54	30	—
	1402	Traction	Below	6½	5½	3	6½	6½	5½	3	3	34	42	30	—
	1431	Traction	Above	6½	5½	3	3	6½	5½	3	3	30	48	30	—
	1432	Traction	Below	6½	5½	3	3	6½	5½	3	3	34	42	30	—
	1420	Drum	Below	6	6	3	3	6	6	3	3	34	36	30	—
	1421	Drum	Above	6	6	3	3	6	6	3	3	30	48	30	—
	1441	Drum	Above	4	4	3	3	4	4	3	3	42	48	42	—
	1442	Drum	Below	4	4	3	3	4	4	3	3	42	42	42	—
FLOOR LEVEL LOADING	1405	Traction	Above	6½	5½	3	6½	6½	5½	3	3	0	54	0	36
	1406	Traction	Below (Adjacent)	6½	5½	3	6½	6	6	3	3	0	42	0	36
	1422	Drum	Below (Adjacent)	6	6	3	3	6	6	3	3	0	42	0	36
	1423	Drum	Above	6	6	3	3	6	6	3	3	0	48	0	36

**Floor level loading with slide up doors, M = 8" minimum.
NOTES: Each car gate reduces useable F to B car space by 1½". Dimension K is based on bi-parting car gates and/or doors.

dumbwaiter entrances

Dumbwaiter doors carry U/L labels and are bi-parting type with steel frames and sound deadened door panels with glass vision lights. Finish is prime paint.

Options: Hollow metal insulated door panels.
Stainless steel sills.
Baked enamel finish.
— or —
Stainless steel.
Slide up or slide down type entrances.

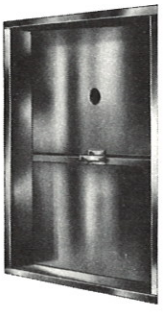

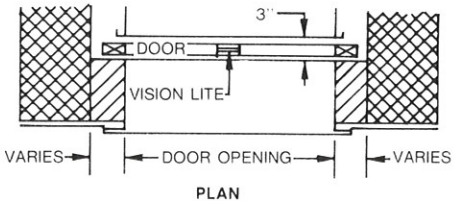

PLAN

DIMENSION KEY:
One or more openings must be larger than the car so that the assembled car can be placed into the hoistway or removed for service or repair. Front walls are not to be erected till door frames are installed.

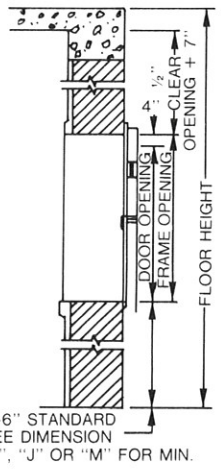

ELEVATION

Escalators move more people at lower cost per passenger than any other form of vertical transportation. They may be the primary carrier in retail buildings, in transportation terminals and in highly populated office buildings, or can effectively augment elevator systems, especially in high rise office buildings.

Operating from main floors to lower parking levels, mezzanine or second floor shops and restaurants, or top elevator floor to penthouse restaurants. Escalators provide the most efficient transportation in these heavy traffic locations, allowing elevator systems to serve other areas of the building more efficiently.

EFFICIENCY —
two steps on the same level at entry and exit speeds and safeguards traffic **"a montgomery exclusive."**

DESIGN/ENGINEERING —
heavy duty construction for long life and trouble free operation

SAFETY —
more and better safety devices than any other escalator

APPEARANCE —
durable modern materials retain attractive appearance

LOW COST MAINTENANCE —
attained by high quality heavy duty equipment

DEPENDABILITY —
quickly and easily serviced — less down time

typical montgomery escalator users

RETAIL

Allied Stores Corporation
Associated Dry Goods Corporation
Bonwit Teller
Carter-Hawley Stores
City Stores Company
Dayton-Hudson Corporation
Dillard Department Stores, Inc.
T. Eaton Company Ltd.
Federated Department Stores, Inc.
Hudson Bay Co.
R.H. Macy and Company, Inc.
Marshall Field and Company
May Department Stores Company
Merchantile Stores, Inc.
Montgomery Ward and Company
Neiman-Marcus
J.C. Penney Co., Inc.
Saks Fifth Avenue
Sears Roebuck & Co.
Woodward & Lothrop, Inc.
Woodward Department Stores

OFFICE-BANK-HOTEL

Blue Cross-Blue Shield
Caterpillar Tractor Co.
Disneyland Hotel
Ford Motor Company
General Motors Corporation
Hilton Hotels Company
Hyatt Regency
Inter-Continental Hotels
Prudential Plaza
Sheraton Hotel Corp.

TRANSPORTATION & PUBLIC

Atlanta International Airport
Boston Subway, Mass. Transit Authority
Candlestick Park
Chicago Transit Authority
Dallas/Fort Worth International Airport
Denver Stapleton Airport
Detroit Cobo Hall
Honolulu International Airport
Los Angeles International Airport
The Louisiana Superdome
Montreal (Mirabel) International Airport
San Francisco-Rapid Transit/BARTD
Sea-Tac International Airport
Chiang Kai-Shek Int'l. Airport (Taiwan)
Toronto International Airport
Toronto Transit Commission

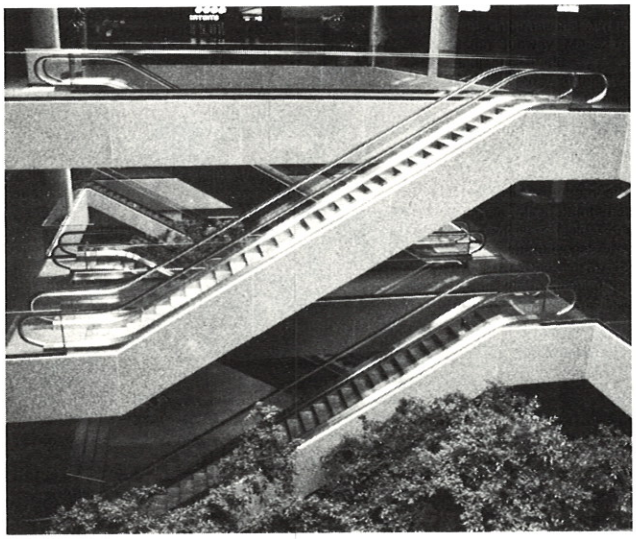

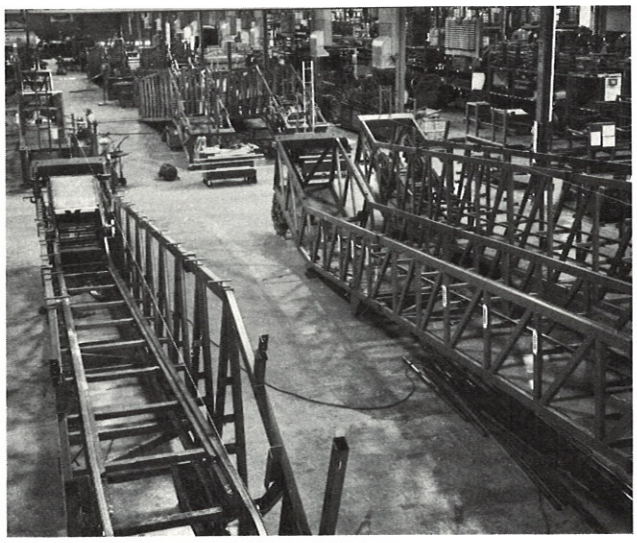

TOP LEFT Edmonton Centre
Edmonton, Alberta, Canada
BOTTOM LEFT Montgomery Escalator Factory
Moline, Illinois
ABOVE Neiman-Marcus
San Diego, California

crystal 2000® glass balustrade

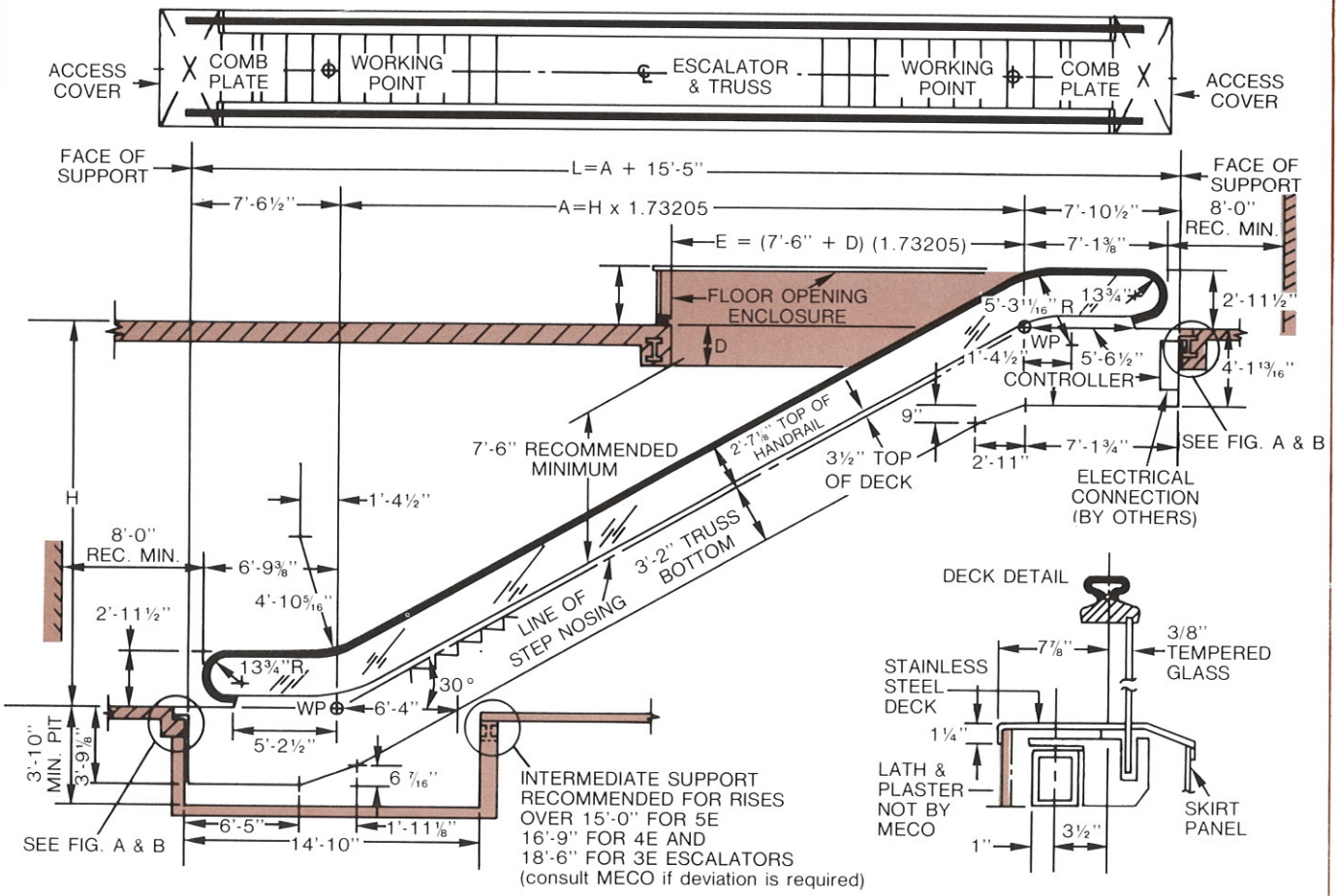

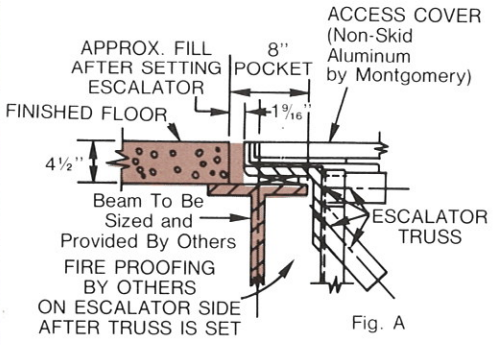

Fig. A

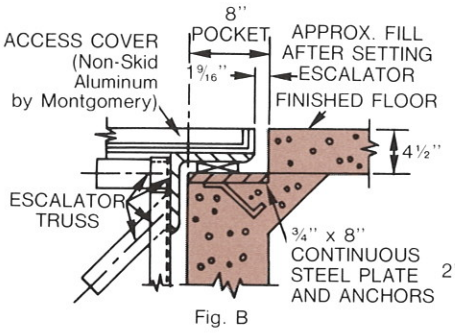

Fig. B

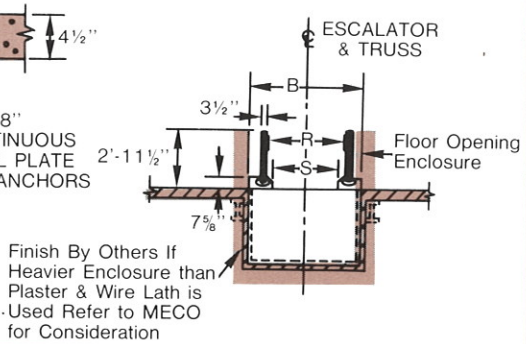

SHADED AREAS BY OTHERS

LAYOUT NOTE:

The following information, when available, must be shown on all layouts for use of the balustrade manufacturer.

D — Dimension from finished floor to the finished plaster ceiling or bottom of smoke guard.

E-F-G — Detail and kind of wellway railings or fire shutter enclosures which are not furnished by the balustrade manufacturer.

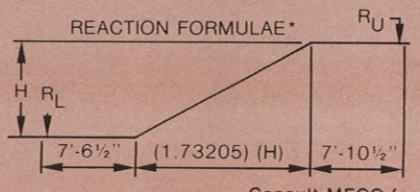

32	ESCALATOR	
RL	(550)H + 10,000	RU = (550)H + 11,100
40	ESCALATOR	
RL	(660)H + 10,570	RU = (660)H + 11,670
48	ESCALATOR	
RL	(660)H + 11,650	RU = (660)H + 12,750

Consult MECO for reactions if intermediate support is used.

solid balustrade

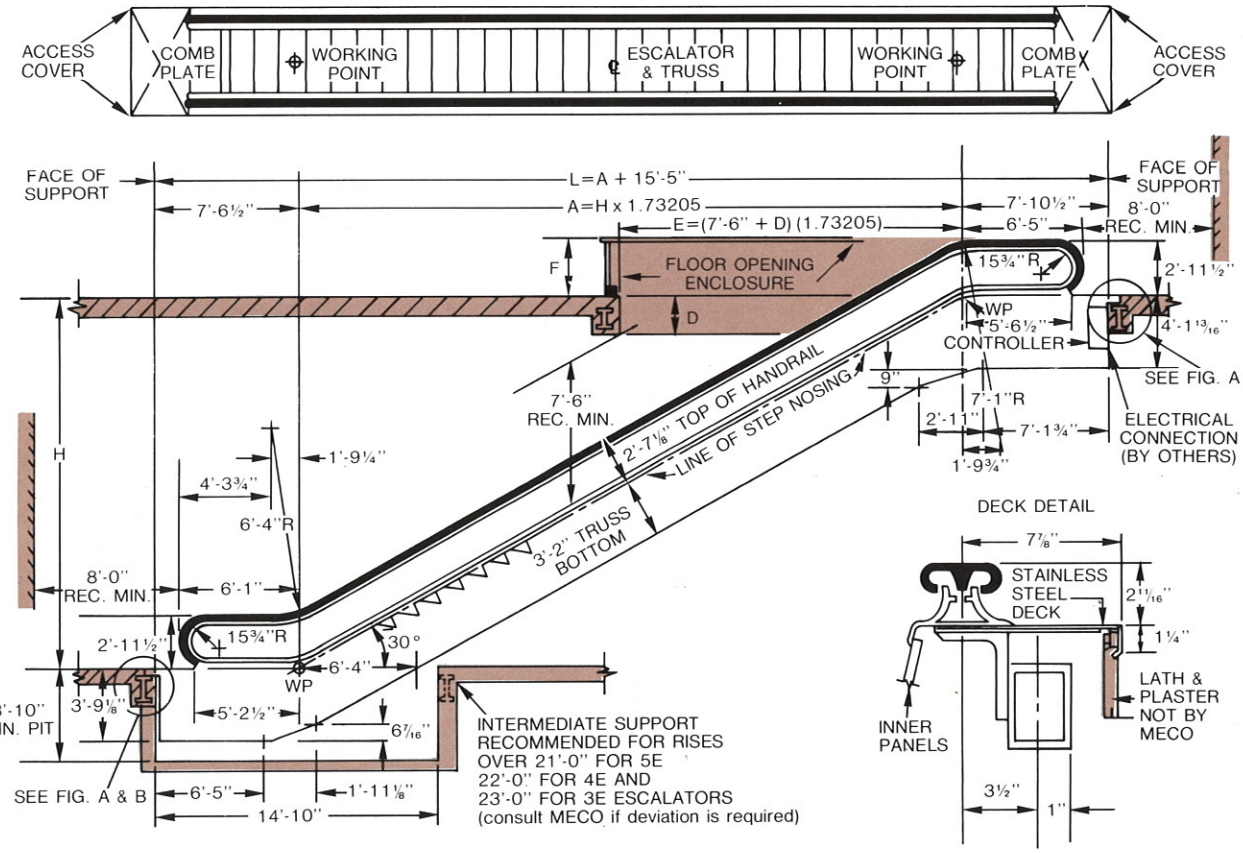

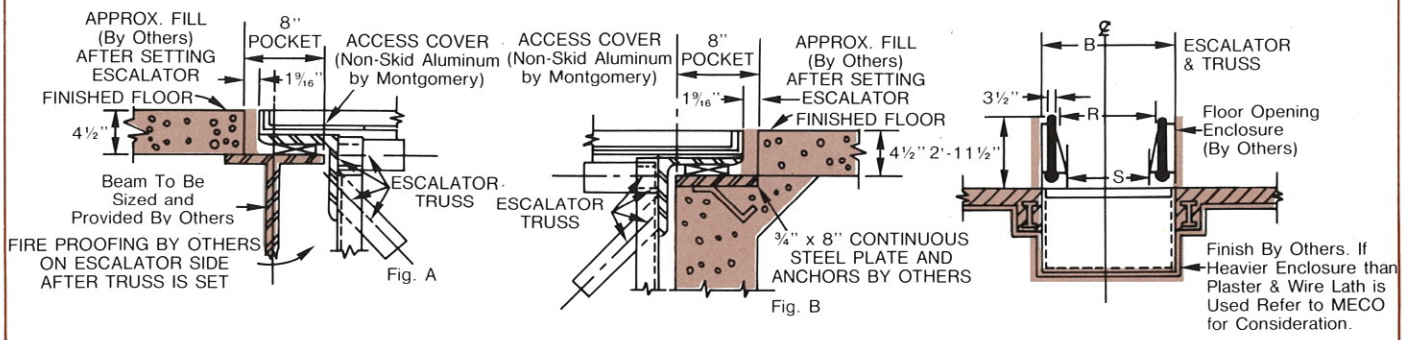

SHADED AREAS BY OTHERS

*Reaction formulae based on:
50% dead load
25% live load
25% impact
Includes weight of metal lath and plaster covering on sides and soffit.

WIDTH CHART

Model No.	Capacity Persons Per Hour At 90fpm	120fpm	Rated Width R	Step Width S	Overall Width B (Note 1)	Well Width Rough Opening (Note 2)
3E	5,000	6,500	32"	24"	4'-4"	Overall Width B + 2"
4E	7,000	9,000	40"	32"	5'-0"	
5E	8,000	10,000	48"	40"	5'-8"	

NOTES:
1. Includes exterior of lath and plaster by others.
2. Enclosure between rough opening and finished escalators to be provided by others.

standard equipment

STANDARD EQUIPMENT INCLUDES

complete truss fabricated of welded, hot rolled, structural steel tubes; precision worm gear drive; roller and ball bearings throughout; flange mounted motor; permanent magnet brake; portable controller,* complete electrical and mechanical safety system; reversing stations; interchangeable precision assembled steps with cleated risers; matched endless step chains; accurately aligned track system; complete balustrade including skirts; inner panels, decks and endless moving neoprene rubber handrail; floor access covers to upper and lower machinery well both within truss area.

REQUIREMENTS

1. Floor around escalator is not to be laid until escalator is installed.
2. Flooring within 8" of escalator floor access doors (top and bottom) is not to be laid until floor access doors are in place.
3. Electric conduits, sprinkler pipes or soffit lights must be installed entirely outside of truss at all points except where codes require sprinkler protection of escalator machinery. Consult Montgomery for location within truss.
4. No walls or other parts of building structure are to be carried on truss.

* CSA or UL listed

OWNER TO PROVIDE AND INSTALL THE FOLLOWING

1. All escalator supports including bearing plates if concrete beams are used.
2. 3 phase, 60 cycle power supply and 110 volt light supply to controller.
3. Combination lamp receptacle and convenience outlet in machine room and lower reversing station.
4. Paper backed wire lath or its equivalent to be used for plaster enclosure of escalator.
5. All items marked "by others."

CONTACT ANY OF OUR SALES AND SERVICE OFFICES TO OBTAIN EXPERT PLANNING ASSISTANCE INCLUDING COMPLETE LAYOUT AND SPECIFICATIONS

MOTOR HORSEPOWER REQUIREMENTS

90 FPM	SIZE	FLOOR HEIGHT
10 HP	3E	5'-6" to 24'-0"
	4E	5'-6" to 17'-0"
	5E	5'-6" to 15'-0"
15 HP	3E	Over 24'-0" to 36'-0"
	4E	Over 17'-0" to 26'-0"
	5E	Over 15'-0" to 23'-0"
20 HP	3E	Over 36'-0" to 42'-0"
	4E	Over 26'-0" to 30'-0"
	5E	Over 23'-0" to 26'-0"

120 FPM		
10 HP	3E	5'-6" to 19'-0"
	4E	5'-6" to 14'-0"
	5E	5'-6" to 12'-0"
15 HP	3E	Over 19'-0" to 28'-0"
	4E	Over 14'-0" to 20'-0"
	5E	Over 12'-0" to 18'-0"
20 HP	3E	Over 28'-0" to 32'-0"
	4E	Over 20'-0" to 23'-0"
	5E	Over 18'-0" to 21'-0"

120/90 FPM (2 SPEED)		
10/7.5 HP	3E	5'-6" to 16'-0"
	4E	5'-6" to 12'-0"
	5E	5'-6" to 11'-0"
15/11.25 HP	3E	Over 16'-0" to 24'-0"
	4E	Over 12'-0" to 18'-0"
	5E	Over 11'-0" to 16'-0"
20/15 HP	3E	Over 24'-0" to 32'-0"
	4E	Over 18'-0" to 23'-0"
	5E	Over 16'-0" to 21'-0"

POWER DATA

90 FPM

HP	200 VOLTS		460 VOLTS		575 VOLTS	
	STARTING CURRENT IN AMPERES	RUNNING CURRENT IN AMPERES	STARTING CURRENT IN AMPERES	RUNNING CURRENT IN AMPERES	STARTING CURRENT IN AMPERES	RUNNING CURRENT IN AMPERES
10	128.25	33.12	57.75	14.4	46.2	11.5
15	213.75	50.6	93.07	22.0	74.47	17.6
20	270.75	64.4	117.75	28.0	94.2	22.4

120 FPM

HP	200 VOLTS		460 VOLTS		575 VOLTS	
	STARTING CURRENT IN AMPERES	RUNNING CURRENT IN AMPERES	STARTING CURRENT IN AMPERES	RUNNING CURRENT IN AMPERES	STARTING CURRENT IN AMPERES	RUNNING CURRENT IN AMPERES
10	130.5	29.4	56.77	12.8	45.45	10.2
15	191.25	47.4	83.1	20.6	66.45	16.5
20	264.75	60.0	114.97	26.1	91.95	20.9

120/90 FPM (2 SPEED)

HP	200 VOLTS		460 VOLTS		575 VOLTS	
	STARTING CURRENT IN AMPERES	RUNNING CURRENT IN AMPERES	STARTING CURRENT IN AMPERES	RUNNING CURRENT IN AMPERES	STARTING CURRENT IN AMPERES	RUNNING CURRENT IN AMPERES
10/7.5	135.75/105.75	30.8/25.9	69.75/62.25	14/12.9	54/47.25	11.1/10.4
15/11.25	190.5 /135.75	45/37.4	95.25/65.25	20.1/16.6	72/48	16.1/13.2
20/15	331.5 /186	64.5/49.7	130.5 /84.75	27/21.8	102.75/70.5	21.7/17.8

ALL POWER DATA BASED ON 3 PHASE 60 HERTZ

POWER WALKS & RAMPS

provide fast, safe, high-volume horizontal, or combined horizontal and inclined (to 12 degrees) transportation of people within buildings, or outdoors. Exposition centers, stadiums, auditoriums, transportation terminals, parking lots to buildings and in or out of buildings are a few walk-ramp applications to transport people where walking is not advantageous.

STANDARD EQUIPMENT INCLUDES

complete truss fabricated of welded, hot rolled, structural steel tubes (or combination of truss and tubular stanchion); precision worm gear drive; roller and ball bearings throughout; flange mounted motor; permanent magnet brake; portable controller;* complete electrical and mechanical safety system; reversing stations; interchangeable precision assembled treadway pallets with interlocking treads on adjacent pallets; matched endless pallet chains; accurately aligned track system; complete balustrades including inner panels; decks with endless moving neoprene rubber hand rail; and floor access covers to upper and lower machinery wells both within truss area.

CONSULT MONTGOMERY

Contact your local Montgomery Representative or the Montgomery Elevator Company, Moline, Illnois, for application data, and layout or specification data needed to plan a complete installation.

* CSA or UL listed

TOP William B. Hartsfield-
Atlanta International Airport
Atlanta, Georgia
BOTTOM Disneyland
Anaheim, California

PLANNING POWER WALKS/POWER RAMPS

Any arrangement or combination of horizontal and inclines, to a maximum of 12 degrees for almost any length can be provided.

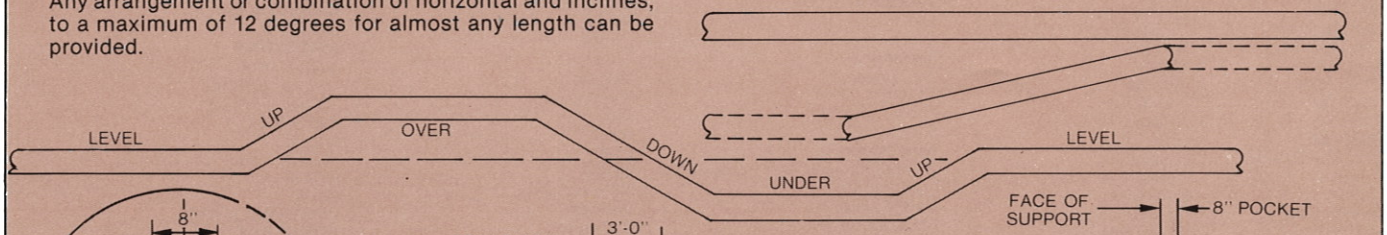

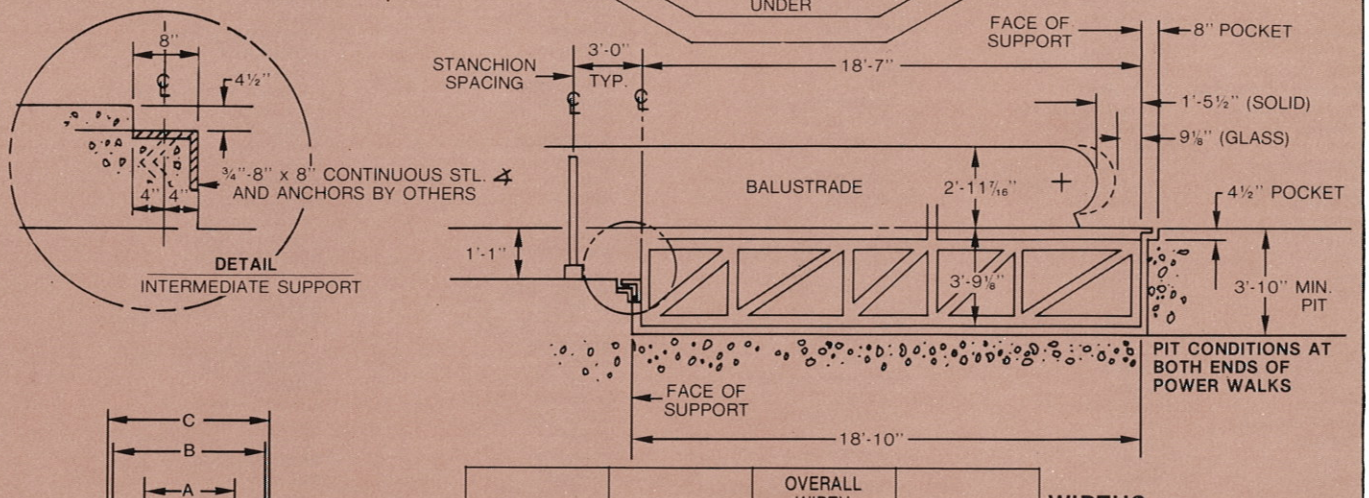

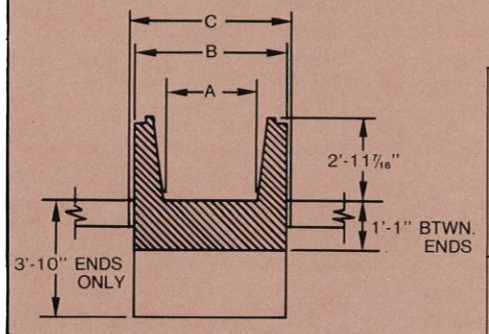

MODEL NO. W = WALK R = RAMP	TREAD WIDTH A	OVERALL WIDTH DECORATOR PANEL OR LATH & PLASTER EXTERIOR COVERING B	WELL WIDTH ROUGH OPENING C
3W-R 4W-R 5W-R	24" 32" 40"	4'-4" 5'-0" 5'-8"	OVERALL WIDTH B + 2"

WIDTHS:
Three standard tread widths are 24", 32" and 40". The 24" width accommodates one adult; the 32" width provides ample room for adult and child or adult and shopping cart; the 40" width accommodates two adjacent adults or adult with luggage.

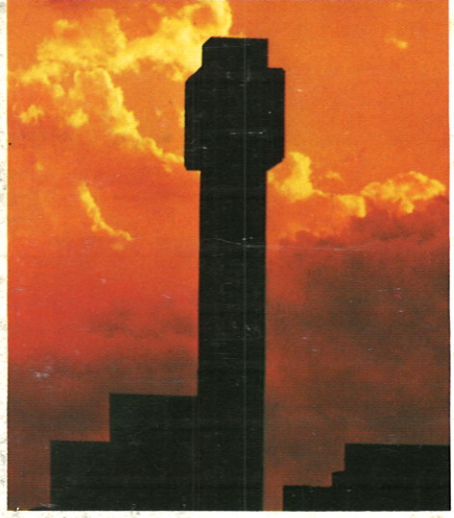

MONTGOMERY SALES/SERVICE OFFICES

UNITED STATES

Alabama
Birmingham
Dothan
Huntsville
Mobile
Montgomery

Alaska
Anchorage
(CMW Company)

Arizona
Phoenix
Tucson

Arkansas
Fayetteville/Springdale
Ft. Smith
Little Rock

California
Fresno
Irvine
Long Beach
Los Angeles
Modesto
Palm Springs
Riverside
Sacramento
San Bernardino
San Diego
San Francisco
San Jose
Santa Maria
Santa Rosa
Stockton
Torrance

Colorado
Colorado Springs
Denver
Greeley

Connecticut
Hartford
(General Elev. Co.)

District of Columbia
Washington D.C.

Florida
Cocoa
Daytona Beach
Ft. Lauderdale
Ft. Myers
Gainesville
Jacksonville
Lakeland
Miami
Naples
Orlando
Pensacola
Sarasota/Bradenton
St. Petersburg
Tallahassee
Tampa
West Palm Beach

Georgia
Atlanta
Augusta
Macon

Hawaii
Hilo
Honolulu
Wailuku

Idaho
Idaho Falls

Illinois
Bloomington
Carbondale
Champaign
Charleston
Chicago
Danville
Decatur
Galesburg
Joliet
Kankakee
LaSalle
Moline
(Corp. Hdqts.)
Mt. Vernon
Peoria
Quincy
(Wagner Elev. Serv., Inc.)
Rock Island
Rockford
(Lamps Elev. Sales & Serv.)
Springfield
Sterling

Indiana
Fort Wayne
(Early Elev. Corp.)
Indianapolis
Kokomo
(Early Elev. Corp.)
Lafayette
Marion
(Early Elev. Corp.)
Muncie
South Bend
(Early Elev. Corp.)
Terre Haute

Iowa
Burlington
(Wagner Elev. Serv., Inc.)
Cedar Rapids
Clinton
Des Moines
Dubuque
Iowa City
Ottumwa
(Wagner Elev. Serv., Inc.)
Sioux City
(Carter Elev. Co., Inc.)
Waterloo

Kansas
Dodge City
Hays
Pittsburg
Salina
Topeka
Wichita

Kentucky
Bowling Green
(Murphy Elev. Co.)
Lexington
(Murphy Elev. Co.)
Louisville
(Murphy Elev. Co.)

Louisiana
Baton Rouge
Lafayette
Lake Charles
New Orleans
Shreveport

Maryland
Annapolis
(Montgomery-Washington, D.C.)
Baltimore
Beltsville

Massachusetts
Boston
Worcester

Michigan
Ann Arbor
Benton Harbor
Detroit
Flint
Grand Rapids
Lansing
Muskegon
Traverse City

Minnesota
Minneapolis-St. Paul

Mississippi
Biloxi
Hattiesburg
Jackson
Meridian

Missouri
Columbia
Jefferson City
Joplin
Kansas City
Kirksville
(Wagner Elev. Serv., Inc.)
St. Joseph
St. Louis

Montana
Billings
Butte
Great Falls
Helena
Missoula

Nebraska
Lincoln
Omaha

Nevada
Las Vegas
Laughlin
Reno
Stateline

New Jersey
(Contact Montgomery Home Office, Moline, IL)

New Mexico
Albuquerque

New York
Albany
(Midstate Elev. Co.)
Binghamton
(Midstate Elev. Co.)
Buffalo
(Gallagher Elev. Co., Inc.)
Glens Falls
(Midstate Elev. Co., Inc.)
Ithaca
(Midstate Elev. Co., Inc.)
Long Island City
(Staley Elev. Co.)
Massena
(Midstate Elev. Co., Inc.)
New York City
Rochester
(Gallagher Elev. Co.)
Syracuse
(Midstate Elev. Co., Inc.)
Utica
(Midstate Elev. Co., Inc.)
Watertown
(Midstate Elev. Co., Inc.)

North Carolina
Boone
Charlotte
Greensboro
Raleigh
Washington

Ohio
Akron
Cincinnati
Cleveland
Columbus
Dayton
Toledo
(Toledo Elev. & Machine Co.)

Oklahoma
Enid
Oklahoma City
Tulsa

Oregon
Eugene
Portland

Pennsylvania
Philadelphia
(Contact Montgomery Home Office, Moline, IL)
Pittsburgh
(Commercial Elev. Co.)

South Carolina
Charleston

South Dakota
Aberdeen
(Carter Elev. Co., Inc.)
Rapid City
(Carter Elev. Co., Inc.)
Sioux Falls
(Carter Elev. Co., Inc.)

Tennessee
Kingsport
Knoxville
Memphis
Nashville
(Capitol City Elev. Co., Inc.)

Texas
Amarillo
Austin
Beaumont
Corpus Christi
Dallas
El Paso
Fort Worth
Galveston
Houston
Laredo
Lubbock
Midland
San Antonio
Tyler
Waco

Utah
Ogden
Salt Lake City

Vermont
Burlington

Virginia
Chesapeake
(Webster Elev. Co.)
Danville

Washington
Edmonds
Seattle
Spokane
Tacoma
Yakima

West Virginia
Charleston
(Murphy Elev. Co.)
Huntington
(Murphy Elev. Co.)

Wisconsin
Appleton
(J. B. Elev. Co.)
Green Bay
(J. B. Elev. Co.)
Madison
Milwaukee
Sheboygan
(J. B. Elev. Co.)
Wausau
(J. B. Elev. Co.)

Wyoming
Casper
Cheyenne

CANADA

Alberta
Calgary
Edmonton
Red Deer

British Columbia
Fort St. John
Kamloops
Kelowna
Nanaimo
Prince George
Prince Rupert
Vancouver
Victoria

Manitoba
Winnipeg

New Brunswick
Moncton
Saint John

Newfoundland
St. John's
(United Elevator Services)

Nova Scotia
Halifax
(Eastern Elevator Services, Ltd.)

Ontario
Barrie
Belleville
Brockville
Cornwall
Hamilton
Kingston
Kitchener
London
North Bay
Ottawa
Peterborough
St. Catharines
Toronto
Windsor

Quebec
Hull
Montreal
Quebec City

Saskatchewan
Saskatoon

ARGENTINA
Buenos Aires
(Ascensores Ing. Guillemi S.R.L.)

BAHAMAS
Nassau
(Basden Elev. Co., Ltd.)

GUAM
Agana

GUATEMALA AND HONDURAS
Guatemala, C.A.
(Equipos Y Constucciones S.A.) (ESCA)

MEXICO
Mexico City
(Hidrojet, s.a. De c.v.)

PANAMA
Afiliada A. Hojalateria
(Instalaciones Tecnicas, S.A.)

PUERTO RICO
Hato Rey
(Engineered Products)

REPUBLIC OF CHINA
Taipei, Taiwan
(Delta Enterprises, Ltd.)

REPUBLIC OF DOMINICA
Santo Domingo
Dominican Republic
(Guridi Comercial, S.A.)

SAUDI ARABIA
Alkhobar
(Alhuseini Corp.)
Jeddah
(Alhuseini Corp.)
Medina Munawara
(Alhuseini Corp.)
Riyadh
(Alhuseini Corp.)

VENEZUELA
Caracas
(C. A. Venezolana de Ascensores)
(Cavenas)

Numerous other Authorized Representatives are located throughout the world.

Check the Yellow Pages for the nearest Montgomery location or call our national headquarters: area code (309) 764-6771.
We're not very far from anywhere in North America.

montgomery®

ELEVATORS/ESCALATORS
POWER WALKS & RAMPS

MONTGOMERY ELEVATOR COMPANY, MOLINE, ILLINOIS 61265 / MONTGOMERY ELEVATOR CO. LIMITED, TORONTO, ONTARIO M9B3S5 / OFFICES IN PRINCIPAL CITIES OF NORTH AMERICA / REPRESENTATIVES WORLDWIDE

montgomery moves people

Form No. SF2015-86

Printed in U.S.A.